LBNL-1989E

ERNEST ORLANDO LAWRENCE
BERKELEY NATIONAL LABORATORY

Guidebook for Using the Tool BEST Cement: Benchmarking and Energy Savings Tool for the Cement Industry

Christina Galitsky, Lynn Price, Nan Zhou

Lawrence Berkeley National Laboratory
Environmental and Energy Technologies Division
Berkeley, CA, USA

Zhou Fuqiu, Xiong Huawen, Zeng Xuemin, Wang Lan

Energy Research Institute
Beijing, China

July 2008

This work was supported by the Energy Foundation, the U.S. Environmental Protection Agency, and Dow Chemical Company through the Department of Energy under contract No. DE-AC02-05CH11231.

Table of Contents

1. Methodology Overview 1

2. Energy Modeling 2

a. *Process based modeling* ... 2
b. *Chinese best practice values* ... 3
c. *International best practice values* ... 3
Raw materials and fuel preparation ... 3
Additives preparation ... 4
Kiln ... 5
Final grinding ... 5
Other production energy uses ... 6

3. How to Use the Tool 6

4. Applicability 6

5. Computer Requirements 7

6. Using the Tool 7

Quick versus Detailed Assessment ... 7
Total versus Kiln by Kiln Assessment ... 8
Production Input Sheet 1 – Raw Materials and Clinker Production ... 8
Raw materials ... 8
Clinker production ... 8
Production Input Sheet 2 – Cement Production and Grinding Mills ... 9
Cement production ... 9
Grinding mills ... 9
Electricity Generation Input Sheet ... 9
Energy Input (detailed assessment) ... 9
Energy Input (quick assessment) ... 10
Energy Billing Input ... 10
Detailed Output Summary ... 10
International Benchmarking Results ... 10
Domestic Benchmarking Results ... 12
Benchmarking by Process Step (detailed assessment only) ... 12
Energy Efficiency Measures Sheets ... 12
Self Assessment Results ... 13
Summary data ... 14
References ... 14

7. Energy Efficiency Options 14

1. Methodology Overview

The Benchmarking and Energy Savings Tool (BEST) Cement is a process-based tool based on commercially available efficiency technologies used anywhere in the world applicable to the cement industry. This version has been designed for use in China. No actual cement facility with every single efficiency measure included in the benchmark will likely exist; however, the benchmark sets a reasonable standard by which to compare for plants striving to be the best. The energy consumption of the benchmark facility differs due to differences in processing at a given cement facility. The tool accounts for most of these variables and allows the user to adapt the model to operational variables specific for his/her cement facility. Figure 1 shows the boundaries included in a plant modeled by BEST Cement.

Figure 1: Boundary conditions for BEST Cement

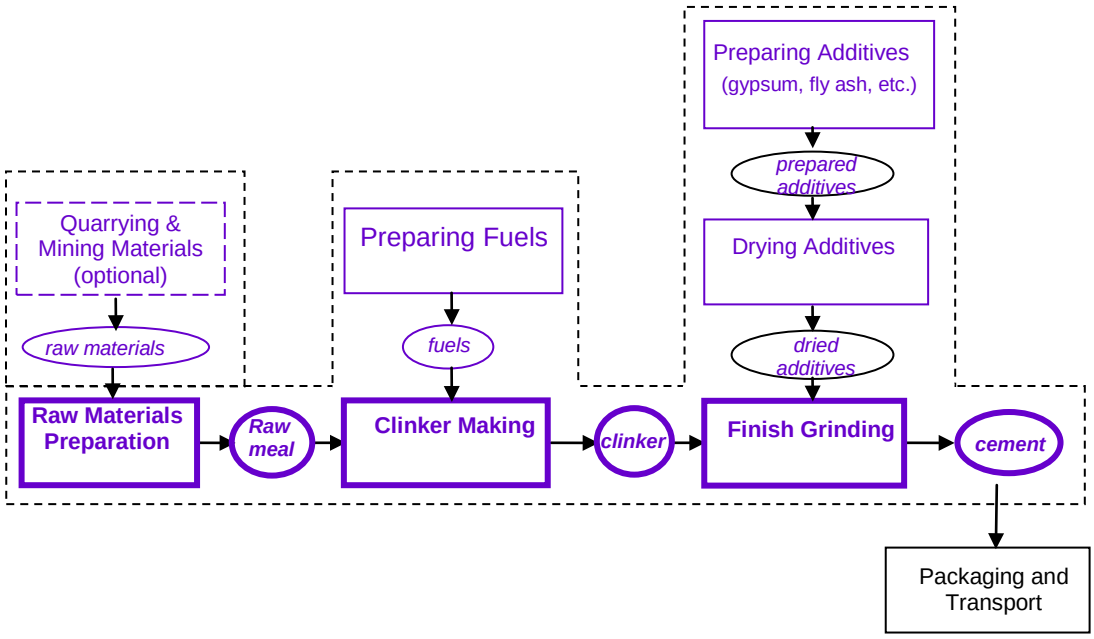

In order to model the benchmark, i.e., the most energy efficient cement facility, so that it represents a facility similar to the user's cement facility, the user is first required to input production variables in the input sheet (see Section 6 for more information on how to input variables). These variables allow the tool to estimate a benchmark facility that is similar to the user's cement plant, giving a better picture of the potential for that particular facility, rather than benchmarking against a generic one.

The input variables required include the following:

- the amount of raw materials used in tonnes per year (limestone, gypsum, clay minerals, iron ore, blast furnace slag, fly ash, slag from other industries, natural pozzolans, limestone powder (used post-clinker stage), municipal wastes and others); the amount of raw materials that are preblended (prehomogenized and proportioned) and crushed (in tonnes per year);
- the amount of additives that are dried and ground (in tonnes per year);

- the production of clinker (in tonnes per year) from each kiln by kiln type;
- the amount of raw materials, coal and clinker that is ground by mill type (in tonnes per year);
- the amount of production of cement by type and grade (in tonnes per year);
- the electricity generated onsite; and,
- the energy used by fuel type; and, the amount (in RMB per year) spent on energy.

The tool offers the user the opportunity to do a quick assessment or a more detailed assessment – this choice will determine the level of detail of the energy input. The detailed assessment will require energy data for each stage of production while the quick assessment will require only total energy used at the entire facility (see Section 6 for more details on quick versus detailed assessments).

The benchmarking tool provides two benchmarks – one for Chinese best practices and one for international best practices. Section 2 describes the differences between these two and how each benchmark was calculated. The tool also asks for a target input by the user for the user to set goals for the facility.

2. Energy Modeling

a. Process based modeling

Energy use at a cement facility is modeled based on the following main process steps:

1. Raw material conveying and quarrying (if applicable)
2. Raw material preparation:
    a. pre-blending (prehomogenization and proportioning)
    b. crushing
    c. grinding
3. Additive preparation
4. Additive drying
5. Fuel preparation
6. Homogenization
7. Kiln systems
    a. preheater (if applicable)
    b. precalciners (if applicable)
    c. kiln
    d. clinker cooler
8. Final grinding

All energy used for each process step, including motors, fans, pumps and other equipment should be included in the energy use entered for each step (see below for what energy is included in these steps).

In addition, the model separately calculates energy requirements for other conveying and auxiliaries and for additional non-production uses, such as lighting, office equipment and other miscellaneous electricity uses. Any energy not accounted for elsewhere but included in the boundary in Figure 1 should be included here in this input variable.

Because clinker making accounts for about 90% of the energy consumed in the cement making process, reducing the ratio of clinker to final cement by mixing clinker with additives can greatly reduce the energy used for manufacture of cement. Best practice values for additive use are based on the following European ENV 197-2 standards: for composite Portland cements (CEM II), up to 35% can be fly ash and 65% clinker; for blast furnace slag cements (CEM III/A), up to 65% can be blast furnace slag and 35% clinker.

b. Chinese best practice values

To determine Chinese (domestic) best practice values, four modern Chinese cement plants were audited and best practices determined at each plant by the Energy Research Institute (ERI) and the China Cement Association. Two of these plants were 2000 tonnes per day (tpd) and two were 4000 tpd.

Chinese best practices for each stage of production were determined from these plants. Where no data was available (for example, non-production energy use), international best practices were used.

c. International best practice values

For the international best practices at each stage of production, data were gathered from public literature sources, plants, and vendors of equipment. These data and calculations are described below.

Raw materials and fuel preparation

Energy used in preparing the raw material consists of preblending (prehomogenization and proportioning), crushing, grinding and drying (if necessary) the raw meal which is mostly limestone. All materials are then homogenized before entering the kiln. Solid fuels input to the kiln must also be crushed, ground, and dried. Best practice for raw materials preparation is based on the use of a longitudinal preblending store with either bridge scraper or bucket wheel reclaimer or a circular preblending store with bridge scraper reclaimer for preblending (prehomogenization and proportioning) at 0.5 kWh/t raw meal,[1] a gyratory crusher at 0.38 kWh/t raw meal,[2] an integrated vertical roller mill system with four grinding rollers and a high-efficiency separator at 11.45 kWh/t raw meal

[1] Cembureau, 1997. *Best Available Techniques for the Cement Industry*, Brussels: Cembureau.
[2] Portland Cement Association, 2004. *Innovations in Portland Cement Manufacturing*. Skokie, IL: PCA.

for grinding,[3] and a gravity (multi-outlet silo) dry system at 0.10 kWh/t raw meal for homogenization.[4] Based on the above values, the overall best practice value for raw materials preparation is 12.05 kWh/t raw material. Ideally this value should take into account the differences in moisture content of the raw materials as well as the hardness of the limestone. Higher moisture content requires more energy for drying and harder limestone requires more crushing and grinding energy. If drying is required, best practice is to install a preheater to dry the raw materials, which decreases the efficiency of the kiln. For BEST Cement, it is assumed that pre-heating of wet raw materials is negligible and does not decrease the efficiency of the kiln.

Solid fuel preparation also depends on the moisture content of the fuel. It is assumed that only coal needs to be dried and ground and that the energy required for drying or grinding of other materials is insignificant or unnecessary. Best practice is to use the waste heat from the kiln system, for example, the clinker cooler (if available) to dry the coal.[5] Best practice using an MPS vertical roller mill is 10-36 kWh/t anthracite, 6-12 kWh/t pit coal, 8-19 kWh/t lignite, and 7-17 kWh/t petcoke[6] or using a bowl mill is 10-18 kWh/t product.[7] Based on the above, it is assumed that best practice for solid fuel preparation is 10 kWh/t product.

Additives preparation

In addition to clinker, some plants use additives in the final cement product. While this reduces the most energy intensive stage of production (clinker making), as well as the carbonation process which produces additional CO_2 as a product of the reaction, some additives require additional electricity for blending and grinding (such as fly ash, slags and pozzolans) and/or additional fuel for drying (such as blast furnace and other slags).

Additional requirements from use of additives are based on the differences between blending and grinding Portland cement (5% additives) and other types of cement (up to 65% additives). Portland Cement typically requires about 55 kWh/t for clinker grinding, while fly ash cement (with 25% fly ash) typically requires 60 kWh/t and blast furnace slag cement (with 65% slag) 80 kWh/t (these are typical grinding numbers only used to determine the additional grinding energy required by additives, not best practice; for best practice refer to data below in cement grinding section). It is assumed that only fly ash, blast furnace and other slags and natural pozzolans need additional energy. Based on the data above, fly ash will require an additional 20 kWh/t of fly ash and slags will require an additional 38 kWh/t of slag. It is assumed that natural pozzolans have requirements similar to fly ash. These data are used to calculate cement grinding requirements. For

---

[3] Schneider, U., "From ordering to operation of the first quadropol roller mill at the Bosenberg Cement Works," *ZKG International*, No.8, 1999: 460-466.
[4] Portland Cement Association, 2004. *Innovations in Portland Cement Manufacturing*. Skokie, IL: PCA.
[5] Worrell, E. and Galitsky, C., 2004. Energy Efficiency Improvement Opportunities for Cement Making: An ENERGY STAR® Guide for Energy and Plant Managers. Berkeley, CA: Lawrence Berkeley National Laboratory (LBNL-54036).
[6] Kraft, B. and Reichardt, Y., 2005. "Grinding of Solid Fuels Using MPS Vertical Roller Mills," *ZKG International* 58:11 (pp 36-47).
[7] Portland Cement Association, 2004. *Innovations in Portland Cement Manufacturing*. Skokie, IL: PCA.

additives which are dried, best practice requires 0.75 GJ/t (26 kgce/t) of additive. Generally, only blast furnace and other slags are dried. Those additives that need to be dried (the default is all slags, although the user can enter this data as well in the production input sheet) best practice requires an additional 0.75 GJ/t (26 kgce/t) of additive.

Kiln

Clinker production can be split into the electricity required to run the machinery, including the fans, the kiln drive, the cooler and the transport of materials to the top of the preheater tower ("kiln preheaters" and "cooler system"), and the fuel needed to dry, to calcine and to clinkerize the raw materials ("precalcination", if applicable, and the "kiln"). Best practice for clinker making mechanical requirements is estimated to be 22.5 kWh/t clinker,[8] while fuel use has been reported as low as 2.85 GJ/t (97.3 kgce/t) clinker.[9]

Final grinding

Best practice for cement grinding depends on the cement being produced, measured as fineness or Blaine (cm^2/g). In 1997, it was reported that the Horomill required 25 kWh/tonne of cement for 3200 Blaine and 30 kWh/tonne cement for 4000 Blaine.[10] We make the following assumptions regarding Chinese cement types: 325 = a Blaine of less than or equal to 3200; 425 = a Blaine of approximately 3500; 525 = a Blaine of about 4000; and, 625 = a Blaine of approximately 4200. More recent estimates of Horomill energy consumption range between 16 and 19 kWh/tonne.[11] We used best practice values for the Horomill for 3200 and 4000 Blaine and interpolated and extrapolated values based on an assumed linear distribution for 3500 and 4200 Blaine. We estimated lowest quality cement requires 16 kWh/tonne and that 3500 Blaine is 8% more than 3200 Blaine (17.3 kWh/tonne), 4000 Blaine is 20% more than 3200 Blaine (19.2 kWh/tonne), and 4200 Blaine is 24% more than 3200 Blaine (19.8 kWh/tonne). We then used these values to estimate the values of other types of cement, based on more or less grinding that would be needed for any additives. We assumed common Portland cement grinding required similar energy as pure Portland cement, that blended slag and fly ash cements were on average, 65% slag and 35% fly ash, that grinding pozzolans required similar energy as grinding slags (at a similar ratio of 65%) and that limestone cement contained 5% extra limestone with grinding requirements similar to grinding slag.

---

[8] COWIconsult, March Consulting Group and MAIN, 1993. *Energy Technology in the Cement Industrial Sector*, Report prepared for CEC - DG-XVII, Brussels, April.

[9] Park, H. 1998. Strategies for Assessing Energy Conservation Potentials in the Korean Manufacturing Sector. In: *Proceedings 1998 Seoul Conference on Energy Use in Manufacturing: Energy Savings and CO_2 Mitigation Policy Analysis*. 19-20 May, POSCO Center, Seoul, Republic of Korea.

[10] Buzzi, S. 1997. Die Horomill® - Eine Neue Mühle für die Feinzerkleinerung, *ZKG International* 3 50: 127-138.

[11] Hendricks, C.A., Worrell, E., de Jager, D., Blok, K., and Riemer, P., 2004. "Emission Reduction of Greenhouse Gases from the Cement Industry," Proceedings of Greenhouse Gas Control Technologies Conference. http://www.wbcsd.org/web/projects/cement/tf1/prghgt42.pdf

Other production energy uses

Some cement facilities have quarries on-site, and those generally use both trucks and conveyors to move raw materials. If applicable to the cement facility, quarrying is estimated to use about 1% of the total electricity at the facility.[12]

Other production energy includes power for auxiliaries and conveyors within the facility. (We have excluded packaging from our analysis). Total power use for auxiliaries is estimated to require about 10 kWh/t of clinker at a cement facility. Power use for conveyors is estimated to require about 1 to 2 kWh/t of cement.[13] Lighting, office equipment, and other miscellaneous electricity uses are estimated to use about 1.2% of the total electricity at the facility.[14]

3. How to Use the Tool

BEST Cement allows you to evaluate the energy efficiency of your facility by benchmarking energy intensity against an efficient reference cement plant. The reference plant is based on existing and proven practices and technologies. The reference facility simulates the production of the same products using the characteristics that you enter for your plant, however, using the most efficient technology. This will provide a benchmark score, called the Energy Intensity Index (EII), which is a relative indication of the performance of your facility. The EII is defined and discussed in more detail in Section 6, below.

After evaluating the performance of your cement plant, you can evaluate the impact of selected energy efficiency measures by choosing the measures that you would likely introduce in your facility, or would like to evaluate for potential use. You then selects if you want to implement each of the measures (yes, no, partially) and if partially, to what degree (for example, 25%, 50%), and BEST Cement calculates the overall energy savings, cost savings, payback period and a re-calculated benchmark (EII). See Section 6, below, for more information on how to use this part of the tool.

4. Applicability

BEST Cement is designed for cement facilities that produce 325, 425, 525 and 625 cement grades (of Portland, common Portland, slag, fly ash, Pozzolana, and/or blended cement types).

---

[12] Warshawsky, J. of CMP. 1996. *TechCommentary: Electricity in Cement Production*. EPRI Center for Materials Production, Carnegie Mellon Research Institute, Pittsburgh, PA.

[13] Worrell, E. and Galitsky, C., 2004. *Energy Efficiency Improvement Opportunities for Cement Making: An ENERGY STAR® Guide for Energy and Plant Managers*. Berkeley, CA: Lawrence Berkeley National Laboratory (LBNL-54036).

[14] Warshawsky, J. of CMP. 1996. *TechCommentary: Electricity in Cement Production*. EPRI Center for Materials Production, Carnegie Mellon Research Institute, Pittsburgh, PA.

5. Computer Requirements

BEST Cement requires a PC computer that runs Windows 2000 or XP. The Microsoft .NET Framework version 2.0 is required to run the application. If the Microsoft .NET Framework is not installed on the user computer, the user would need to install the Microsoft .NET Framework runtime and associated files first.

After entering data please save BEST Cement with a different file name on your computer.

6. Using the Tool

This program consists of a number of worksheets. Data from the input sheets are used for calculations throughout the workbook. After completing a worksheet, you will be automatically transferred to the next worksheet by pressing the appropriate button on the worksheet. In the following, we walk through the worksheets of the BEST Cement step-by-step.

Quick versus Detailed Assessment

This tool allows you to select one of the following:

(1) a detailed assessment
(2) a quick assessment

The detailed assessment will require you to input data for production and energy for each of the steps of the process:

1. Raw material conveying and quarrying (if applicable)
2. Raw material preparation:
    a. pre-blending (prehomogenization and proportioning)
    b. crushing
    c. grinding
3. Additive preparation
4. Additive drying
5. Fuel preparation
6. Homogenization
7. Kiln systems
    d. preheater (if applicable)
    e. precalciners (if applicable)
    f. kiln
    g. clinker cooler
8. Cement (final) grinding

In addition, if known, you also input the energy requirements for other conveying and auxiliaries and for additional non-production uses, such as lighting, office equipment and other miscellaneous electricity uses.

The detailed assessment comparisons will be more robust than the quick assessment results; however, the quick assessment will enable you to enter only total energy used at your facility (by electricity and fuel type). (You will still need production data for each step of the process.) In summary, you will need much less data for the quick assessment, but the results will be more limited.

Total versus Kiln by Kiln Assessment

This tool allows you to select assessment of your entire facility or kiln by kiln. If you choose to do an assessment of your whole facility, production data will be entered for all of the kilns on the first input sheet. If you choose assessment by kiln only, you will be asked to enter all production data as it applies only to that kiln – raw materials, clinker production and cement production for that single kiln line only.

► Press the appropriate button to select a detailed or quick assessment of your entire facility or kiln by kiln to go to the first input sheet.

In the Input sheets, you will enter essential information to enable benchmarking of your facility. You need only fill in the yellow cells. Green cells are optional in which default values are provided and may be used or you may enter your own data. Cells with other colors (for example, grey cells) are calculated from input data or constants and cannot be changed.

Production Input Sheet 1 – Raw Materials and Clinker Production

Fill in all yellow cells with the information below.

Raw materials

1. Amount of limestone used. Enter annual amount of limestone in tonnes of material.
2. Quantity of additives used. For each additive, enter annual amount in tonnes. If additives other than those listed are used, enter the additive type in the “other 1” or “other 2” box and its amount.
3. Enter the amount of materials that are preblended, crushed, dried and ground. User may use default values (where provided) or may enter his/her own data if available.

Clinker production

3. Select kiln type for each kiln at your facility from the drop-down list. Click on cell to see drop down list.
4. Enter amount of clinker produced from each kiln type below the kiln type selected in #3. Enter amount in tonnes of clinker produced per year.

Production Input Sheet 2 – Cement Production and Grinding Mills

Fill in all yellow cells with the information below.

Cement production

5. Enter amount of each cement type produced. Enter amount in tonnes produced per year.

Grinding mills

6. Enter the amount of raw materials, fuel (coal) and cement that is ground in each type of mill for each of the three stages in tonnes per year. (For quick assessments – this step is on the following page.) The total should add to the total for all mills entered in the previous sheet. For fuel grinding, also enter the total tonnes of caol which is ground at your facility. The total raw materials and the total cement ground are calculated based on the data entered in the previous sheet.

Electricity Generation Input Sheet

Fill in all yellow cells with the information below.

First, enter total electricity purchased at your plant.

Next, enter total annual electricity generated on site (in kWh/year). Enter the electricity generated at your site and then sold to the grid or offsite (in kWh/year). All electricity not sold is assumed to be used onsite for some purpose and calculated in the grey cell. Finally, enter data for all energy that is used to generate electricity. The default cell assumes that all electricity generated at your facility comes from waste heat, using the equivalent calorific value of all electricity generated. Use this default or enter another value in this cell. (If other fuels besides waste heat are used to generate electricity, this value must be corrected to the accurate value). Enter any other fuels used to generate electricity on this sheet. Do not include fuels used for any other purpose.

If desired, use the energy conversion calculator to convert from physical units (for example, tonnes or kg) to energy units (kgce).

Energy Input (detailed assessment)

For each step of the process, enter electricity and fuel used (by type of fuel). These data should include all energy used for each step; for example, cement grinding should include all motors, fans, and equipment needed to completely grind the clinker into cement. Omitting some equipment will generate an inaccurate score and mis-calculate energy and cost savings later in the tool.

Energy Input (quick assessment)

Enter the total energy used at your facility by fuel. (Electricity was already entered on the previous sheet). On the right side of the page, from the drop down menu, answer yes or no if your quarry is located on site.

Remember, all grey cells are calculated and do not need to be input.

Energy Billing Input

Enter the cost of each type of fuel and electricity purchased and used at your site per year. For the green cells, default values can be used or your own data can be entered. A simple calculator is provided for you if you know the price of the fuel and the amount purchased that year but not the total amount spent per year.

On the right side of the page you must choose a target for your plant. This target may be either a percentage reduction (for example, 20%) or an absolute reduction (for example, 100,000 tce/year). If a percentage reduction is chosen, your absolute reduction is calculated automatically in the green cell.

Detailed Output Summary

This summary sheet gives detailed information about the benchmark cement plant (both international and domestic). If the detailed assessment was performed, reference facility and actual facility data is given for each process step for comparison. If the quick assessment was carried out, data is only given for each process step for the reference facility; and total energy (for the entire facility) is given for both the reference and actual facilities. Both international and domestic best practice values, technologies, and references for those values and technologies are provided on this sheet for each process step. The user may continue on to the next page by pressing the next button. Pressing the references button will show all references used to create the benchmark as well as those used for the efficiency measures.

International Benchmarking Results

On this page, the first chart shows your facility's current energy use (final energy), your target energy use (your current energy minus the target entered on the target setting worksheet) and the international (or domestic, on the next sheet) best practice energy use. Comparing the three bars shows the distance you are from your target and best practice.

In the next chart is shown the benchmarking results for your facility compared to international best practice. An energy intensity index (EII) is calculated based on your facility's energy intensity and the benchmark energy intensity . The EII is a measurement of the total production energy intensity of your cement facility compared to the benchmark energy intensity as in the following equation:

$$EII = 100 * \frac{\sum_{i=1}^{n} P_i * EI_i}{\sum_{i=1}^{n} P_i * EI_{i,BP}} = 100 * \frac{E_{tot}}{\sum_{i=1}^{n} P_i * EI_{i,BP}} \qquad \text{(Equation 1)}$$

where

EII	= energy intensity index
n	= number of products to be aggregated
EI_i	= actual energy intensity for product i
$EI_{i,BP}$	= best practice energy intensity for product i
P_i	= production quantity for product i.
E_{tot}	= total actual energy consumption for all products

The EII is then used to calculate the energy efficiency potential at your facility by comparing your actual cement plant's intensity to the intensity that would result if your plant used "reference" best technology for each process step. If a detailed assessment was performed, the difference between your actual intensity (the energy used at your facility per tonne of cement produced), and that of the reference or benchmark facility is calculated for each of the key process steps of the facility and then aggregated for the entire cement plant. If the quick assessment was executed, only total aggregated energy intensities are compared.

The EII provides an indication of how the actual total production intensity of your facility compares to the benchmark or reference intensity. By definition (see equation 1), a plant that uses the benchmark or reference technology will have an EII of 100. In practice, actual cement plants will have an EII greater than 100. The gap between actual energy intensity at each process step and the reference level energy consumption can be viewed as the technical energy efficiency potential of your plant.

At the bottom of this sheet you may choose to see the EII in terms of primary energy (electricity includes transmission and generation losses in addition to the heat conversion factor) or final energy (electricity includes only the heat conversion factor).

BEST Cement also provides an estimate of the potential for annual energy savings (both for electricity and fuel) and energy costs savings, if your facility would perform at the same performance level as the benchmark or “reference” cement plant. For this sheet, all reference benchmarks are international best practices. In the next sheet, all benchmarks are domestic best practices.

All intensities are given as comprehensive intensities. Comprehensive electricity intensity is equal to the total electricity consumed per tonne of cement produced. It only includes adjustments based on the raw materials you use and the types of cement produced. It does not include other factors such as altitude adjustments or temperature or climatic adjustments. Similarly, comprehensive fuel intensity is equal to the total fuel consumed per tonne of clinker produced, based on the raw materials input. It does not include other factors such as altitude adjustments or temperature or climatic adjustments.

Domestic Benchmarking Results

As performed for international benchmarking results, comparisons between your facility and the best domestic technologies and practices are shown on this sheet as an EII, as well as comparisons with the target you chose. BEST Cement also provides estimates of the potential for annual energy savings (both for electricity and fuel) and energy costs savings, if your facility would perform at the same performance level as the domestic benchmark or "reference" cement plant. All intensities are given as comprehensive intensities. At the bottom of the sheet you may choose either to show EII results in primary energy (electricity includes transmission and generation losses in addition to the heat conversion factor) or final energy (electricity includes only the heat conversion factor).

Benchmarking by Process Step (detailed assessment only)

This page shows the EII for each process step for international and domestic best practices. Again, you may choose whether to show the results as primary energy (electricity includes transmission and generation losses in addition to the heat conversion factor) or final energy (electricity includes only the heat conversion factor) by selecting the appropriate button at the bottom of the page. The next sheet within the Benchmarking by Process Step Results shows the share of fuel and electricity used in the facility split by primary energy, final energy and costs (first column) as well as the primary energy, final energy and costs for each process step (second and third columns).

At this point the user may choose to continue on to the efficiency opportunities section of the tool, generate a report of the results, return to the previous results, or save and exit the tool.

Energy Efficiency Measures Sheets

Once the EII has been calculated, BEST Cement can be used to preliminarily evaluate the potential for energy efficiency improvement, by going through a menu of opportunities. The menu of energy efficiency measures is split into six sheets, according to process steps, as follows:

1. Raw materials preparation
2. Fuels preparation
3. Kiln
4. Cement grinding
5. Product and feedstock changes
6. Utility systems

Choose the sheet where you would like to start. The Self Assessment Results pages should be selected after you have evaluated the energy efficiency opportunities.

For each energy efficiency measures sheet, a list of energy efficiency measures is given

for that step. For each measure, a description of the measure can be found by double clicking on the cell with the name of the measure (the first column). Also provided is typical energy savings, capital costs and payback periods for that measure. You will need to decide whether or not to implement each measure at your plant by selecting from the three options in the drop down menu for each measure: yes, completely; yes, partially; or no. If yes, partially is selected, the percentage of application must be entered in the next column.

The estimates for energy savings and costs are necessarily based on past experiences in the cement and other industries; however, actual performance and very specific characteristics for the user's cement facility may go beyond the capabilities of BEST and change the results. Hence, BEST Cement gives an estimate of actual results for a preliminary evaluation of cost effective projects for the user's cement plant; for a more detailed and exact assessment, a specialized engineer or contractor should be consulted.

Each energy efficiency sheet will add the savings of the individual measures from that sheet and from all other sheets already evaluated and provide a running total cost and savings estimate, as well as an average payback period for all selected measures. This information is transferred to the final "Self Assessment Results" sheet (see below).

After selecting the efficiency measures and opportunities for each process step, press the "OK" button. This will tkae you back to he first sheet of this section, listing the different stages of production (for which there exist efficiency measures) as well as the self-assessment results. The final "OK" button will open the Self Assessment Results sheet.

Self Assessment Results

The Self Assessment Results sheets provide the final results of the self-assessment of the potential for energy efficiency improvement.

The first chart shows the your facility's energy use, your target, your new projected energy with your selected measures implemented, and the international and domestic best practice energy use. Comparing the bars shows the distance you are from your target and from best practice both before and after you've implemented the selected measures.

The next chart down shows your current, actual EII and what the EII would be after all the selected energy and water-efficiency measures would be implemented. Both international and domestic EII's are provided. Press the button at the bottom of the sheet to display results in either primary energy (electricity includes transmission and generation losses in addition to the heat conversion factor) or final energy (electricity includes only the heat conversion factor).

This sheet also reports the energy savings potential and the savings for the measures you selected (kgce/year), the cost reduction potential and savings for the measures you selected (RMB/year), and the emissions reductions potential and savings for the measures

you selected (tonne CO_2/year). Emissions reductions are based on final energy.

Summary data

This sheet includes energy data, financial data and emission reductions for your plant, for the benchmark (reference) plant and for the efficiency measures you selected.

Pressing the "OK" button takes you back to the Energy Efficiency Measures Sheet reevaluate the efficiency opportunities or save and/or exit.

References

The References Worksheet provides all references used in the BEST Cement.

7. Energy Efficiency Options

Below are the options for improving energy efficiency at your cement plant. Not every measure will apply to each plant.

Efficient Transport Systems for Raw Materials Preparation (Dry Process)

Description: Transport systems are required to convey powdered materials such as kiln feed, kiln dust, and finished cement throughout the plant. These materials are usually transported by means of either pneumatic or mechanical conveyors. Mechanical conveyors use less power than pneumatic systems. Conversion to mechanical conveyors is cost-effective when replacement of conveyor systems is needed to increase reliability and reduce downtime.

Energy/Environment/Cost/Other Benefits:

- The average energy savings are estimated to be 2.0 kWh/t raw material with a switch to mechanical conveyor systems[1].
- Installation costs for the system are approximately $3/t raw material production[1].

Block Diagram or Photo:

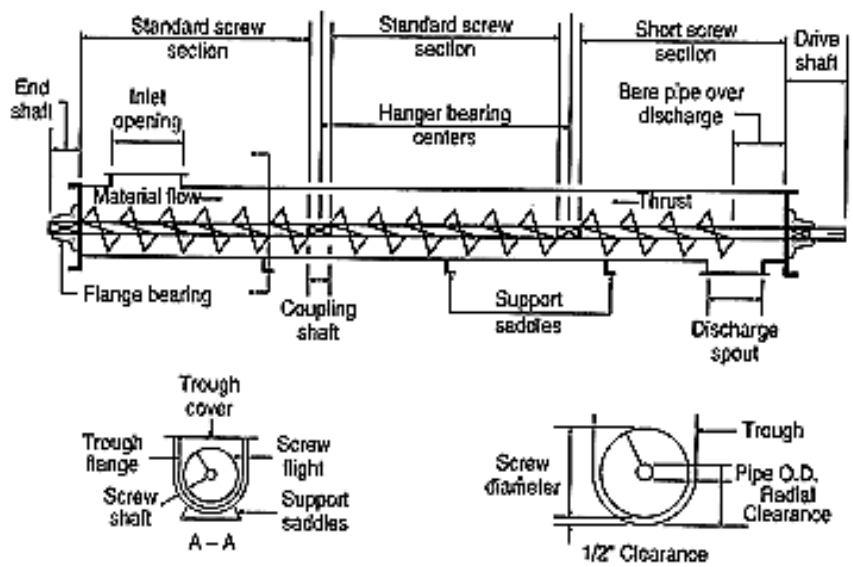

Basic configuration of Screw Conveyor, taken from Bhatty, J. I., F. M. Miller and S. H. Kosmatka (eds.) 2004. Innovations in Portland Cement Manufacturing. Portland Cement Association.

Case Studies:

- Birla Cement Works, Chittorgarh Company in India replaced the pneumatic transport systems for kiln feeds with mechanical transport systems and found a power savings of 1.24 kWh/t clinker at a cost of 15.3 INR/t clinker (2.64 RMB/ t clinker)[2].
- Chittor Cement Works (Chittorgarh Company in India) replaced the pneumatic transport system by a mechanical system in homogenization silos for two silos (for two kiln feeds) resulting in power savings of 2.35 kWh/t clinker at a cost of 10 INR/t clinker (1.7 RMB/t clinker)[2].

---

[1] Holderbank Consulting, 1993. *Present and Future Energy Use of Energy in the Cement and Concrete Industries in Canada*, CANMET, Ottawa, Ontario, Canada.

[2] The United Nations Framework Convention on Climate Change (2008) CDM project documents available at: http://cdm.unfccc.int/Projects/DB/SGS-UKL1175340468.27/view

Raw Meal Blending (Homogenizing) Systems (Dry Process)

Description: To produce a good quality product and to maintain optimal and efficient combustion conditions in the kiln, it is crucial that the raw meal is completely homogenized. Quality control starts in the quarry and continues to the blending silo. On-line analyzers for raw mix control are an integral part of the quality control system [1,2].

Most plants use compressed air to agitate the powdered meal in so-called air-fluidized homogenizing silos. Older dry process plants use mechanical systems, which simultaneously withdraw material from six to eight different silos at variable rates[1]. Modern plants use gravity-type homogenizing silos (or continuous blending and storage silos) reducing power consumption. In these silos, material funnels down one of many discharge points, where it is mixed in an inverted cone. Gravity-type silos may not give the same blending efficiency as air-fluidized systems. Although most older plants use mechanical or air-fluidized bed systems, more and more new plants seem to have gravity-type silos, because of the significant reduction in power consumption[2].

Energy/Environment/Cost/Other Benefits:

- Operating compressed air to agitate the powdered meal in so-called air-fluidized homogenizing silos uses 1.1 to 1.5 kWh/t raw meal. Older dry process plants using mechanical systems use 2.2 to 2.6 kWh/t raw meal. Modern plants using gravity-type homogenizing silos (or continuous blending and storage silos) reduce power consumption; energy savings are estimated to be 1.0 to 2.5 kWh/t raw meal [1,2,3,4,5].
- Silo retrofit options are cost-effective when the silo can be partitioned with air slides and divided into compartments which are sequentially agitated, as opposed to the construction of a whole new silo system[5].
- Costs for the silo retrofit are estimated to be $3.7/t raw material, assuming $550K per silo and an average capacity of 150,000 tonnes annual capacity.

---

[1] Fujimoto, S., 1993. "Modern Technology Impact on Power Usage in Cement Plants," *Proc. 35th IEEE Cement Industry Technical Conference*, Toronto, Ontario, Canada, May 1993.
[2] Holderbank Consulting, 1993. *Present and Future Energy Use of Energy in the Cement and Concrete Industries in Canada*, CANMET, Ottawa, Ontario, Canada.
[3] Alsop, P.A. and J.W. Post. 1995. *The Cement Plant Operations Handbook*, (First edition), Tradeship Publications Ltd., Dorking, UK.
[4] Cembureau, 1997. *Best Available Techniques for the Cement Industry*, Brussels: Cembureau.
[5] Gerbec, R., 1999. Fuller Company. Personal Communication.

Block Diagram or Photo:

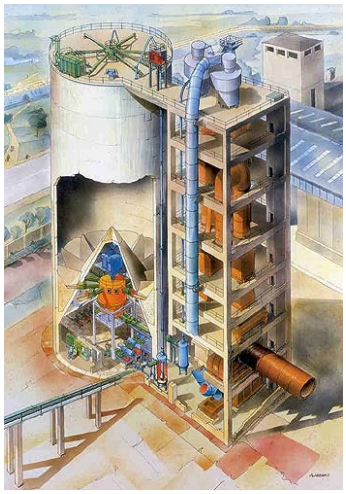

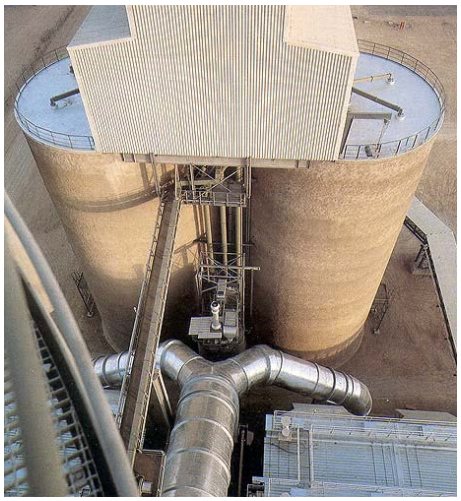

Images taken from Ibau, Hamburg: http://www.ibauhamburg.de/raw_meal_silos_01.htm

Raw Meal Process Control for Vertical Mills (Dry process)

Description: The main difficulty with existing vertical roller mills are vibration trips. Operation at high throughput makes manual vibration control difficult. When the raw mill trips, it cannot be started up for one hour, until the motor windings cool. A model predictive multivariable controller maximizes total feed while maintaining a target residue and enforcing a safe range for trip-level vibration. The first application eliminated avoidable vibration trips (which were 12 per month prior to the control project).

Energy/Environment/Cost/Other Benefits:

- Increase in throughput of six percent with a corresponding reduction in specific energy consumption of six percent[1] or 0.8 to 1.0 kWh/tonne of raw material[2].

Block Diagram or Photo:

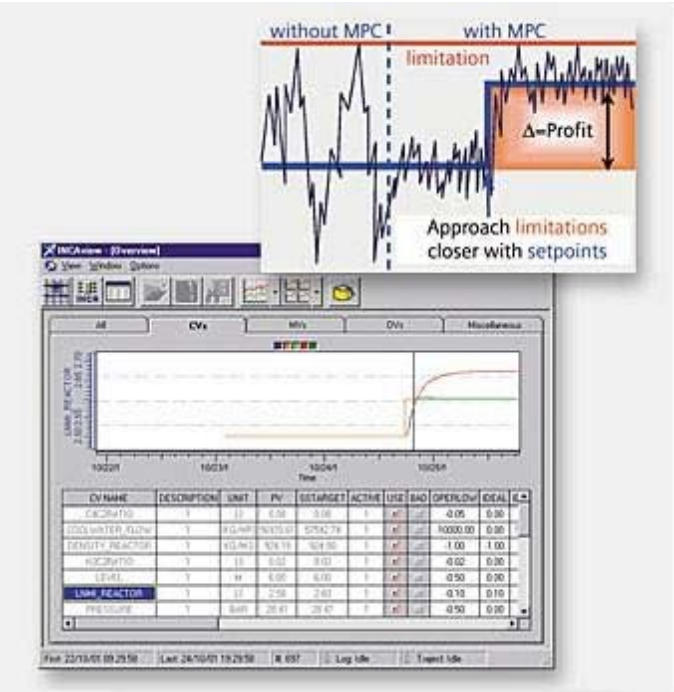

Image taken from Siemens, http://www2.sea.siemens.com/Products/Process-Automation/Performance/PerformanceAdvancedProcessControl_mvpc.htm

[1] Martin, G. and S. McGarel, 2001. "Automated Solution," *International Cement Review*, February 2001, pp.66-67.
[2] Cembureau, 1997. *Best Available Techniques for the Cement Industry*, Brussels: Cembureau.

Use of Roller Mills (Dry Process)

Description: Traditional ball mills used for grinding certain raw materials (mainly hard limestone) can be replaced by high-efficiency roller mills, by ball mills combined with high-pressure roller presses, or by horizontal roller mills. The use of these advanced mills saves energy without compromising product quality. Various roller mill process designs are marketed.

Energy/Environment/Cost/Other Benefits:

- Energy savings of 6 to 7 kWh/t raw materials[1] are assumed through the installation of a vertical or horizontal roller mill.
- An additional advantage of the inline vertical roller mills is that they can combine raw material drying with the grinding process by using large quantities of low grade waste heat from the kilns or clinker coolers[2].
- Investments are estimated to be $5.5/t raw material[3].

Block Diagram or Photo:

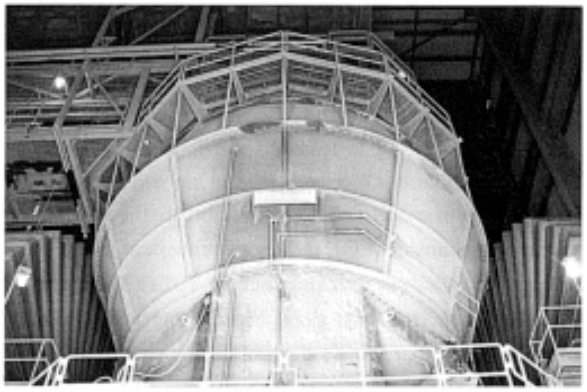

(a)

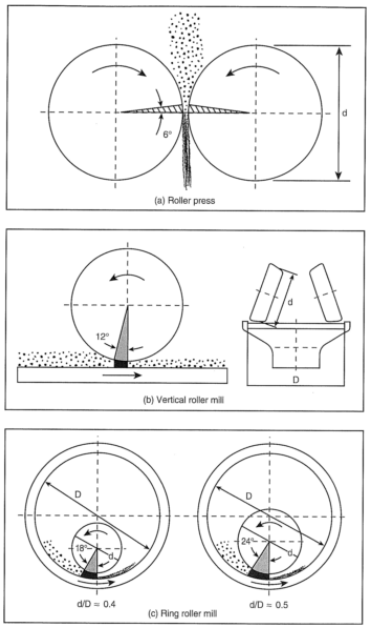

(a) Vertical roller mill (b) Three communition systems based on rolling action, both taken from Bhatty, J. I., F. M. Miller and S. H. Kosmatka (eds.) 2004. Innovations in Portland Cement Manufacturing. Portland Cement Association.

(b)

Case Studies:

- Arizona Portland Cement (Rillito, Arizona, U.S.) installed a raw material grinding roller mill in 1998, increasing throughput, flexibility, and raw meal fineness and reducing electricity.[4]
- Xinxiang Cement Company, Henan province installed a roller mill in its cement facility for 80 ton/hour. Electricity consumption was 15.4kWh/tonne.[5]

---

[1] Cembureau, 1997. *Best Available Techniques for the Cement Industry*, Brussels: Cembureau.
[2] Venkateswaran, S.R. and H.E. Lowitt. 1988. *The U.S. Cement Industry, An Energy Perspective*, U.S. Department of Energy, Washington D.C., USA.
[3] Holderbank Consulting, 1993. *Present and Future Energy Use of Energy in the Cement and Concrete Industries in Canada*, CANMET, Ottawa, Ontario, Canada.
[4] De Hayes, L.J., 1999. "Flexibility, Availability and Maintenance Concept for the Quadropol", Polysius Teilt Mit No. 208, pp.33-38, Krupp Polysius, Germany.
[5] Presentation by Allbest Creative Development Ltd. Information available at: http://www.cement-hightech.com/files/allbest-cement.pdf

High-efficiency Classifiers/Separators (Dry Process)

Description: A recent development in efficient grinding technologies is the use of high-efficiency classifiers or separators. Classifiers separate the finely ground particles from the coarse particles. The large particles are then recycled back to the mill. High efficiency classifiers can be used in both the raw materials mill and in the finish grinding mill. Standard classifiers may have a low separation efficiency, leading to the recycling of fine particles and resulting in to extra power use in the grinding mill. Various concepts of high-efficiency classifiers have been developed[1,2]. In high-efficiency classifiers, the material stays longer in the separator, leading to sharper separation, thus reducing over-grinding.

Energy/Environment/Cost/Other Benefits:

- Electricity savings through implementing high-efficiency classifiers are estimated to be 8% of the specific electricity use[1,].
- Case studies have shown a reduction of 2.8 to 3.7 kWh/t raw material[2,3].
- Replacing a conventional classifier by a high-efficiency classifier has led to 15% increases in the grinding mill capacity[1]and improved product quality due to a more uniform particle size[3], both in raw meal and cement.
- The better size distribution of the raw meal may lead to fuel savings in the kiln and improved clinker quality.
- Investment costs are estimated to be $2.2/annual t raw material production[1]

Block Diagram or Photo:

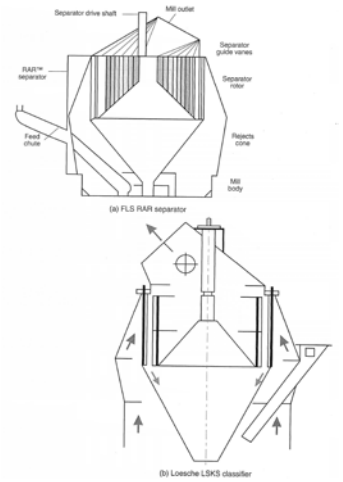

Examples of high efficiency classifiers in vertical roller mills from Bhatty, J. I., F. M. Miller and S. H. Kosmatka (eds.) 2004. Innovations in Portland Cement Manufacturing. Portland Cement Association.

Case Studies:

- In 1990, Tilbury Cement (Delta, British Columbia, Canada) modified a vertical roller mill with a high-efficiency classifier increasing throughput and decreasing electricity use[3].

---

[1] Holderbank Consulting, 1993. *Present and Future Energy Use of Energy in the Cement and Concrete Industries in Canada*, CANMET, Ottawa, Ontario, Canada.
[2] Süssegger, A., 1993. Separator-Report '92 Proc. KHD Symposium '92, Volume 1 *Modern Roller Press Technology*, KHD Humboldt Wedag, Cologne, Germany.
[3] Salzborn, D. and A. Chin-Fatt, 1993. "Operational Results of a Vertical Roller Mill Modified with a High Efficiency Classifier" *Proc. 35th IEEE Cement Industry Technical Conference*, Toronto, Ontario, Canada.

Slurry Blending and Homogenizing (Wet Process)

Description: In the wet process, the slurry is blended and homogenized in a batch process. The mixing is done using compressed air and rotating stirrers. The use of compressed air may lead to relatively high energy losses because of its poor efficiency. The main energy efficiency improvement measures for slurry blending systems are found in the compressed air system (included in "plant-wide measures" pages).

Energy/Environment/Cost/Other Benefits:

- An efficiently run mixing system uses approximately 0.3 to 0.5 kWh/t raw material[1].

Block Diagram or Photo:

Slurry storage and blending tank, image taken from Wikipedia, http://en.wikipedia.org/wiki/Rawmill

[1] Cembureau, 1997. *Best Available Techniques for the Cement Industry*, Brussels: Cembureau.

Wash Mills with Closed Circuit Classifier (Wet Process)

Description: In most wet process kilns, tube mills are used in combination with closed or open circuit classifiers.

Energy/Environment/Cost/Other Benefits:

- An efficient tube mill system consumes about 13 kWh/t[1]. Replacing the tube mill by a wash mill would reduce electricity consumption to 5 to 7 kWh/t[1] at comparable investment and operation costs as a tube mill system.
- When replacing a tube mill, a wash mill should be considered as an alternative, reducing electricity consumption for raw grinding by 5 to 7 kWh/t or 40 to 60%.

Block Diagram or Photo:

Tube mill, taken from http://www.xzhdjx.com/english/showinfo.asp?id=12, Xuzhou Huadon Machinery Plant website.

[1] Cembureau, 1997. *Best Available Techniques for the Cement Industry*, Brussels: Cembureau.

Roller Mills for Fuel Preparation

Description: Coal is the most used fuel in the cement industry, and the main fuel for the vast majority of clinker kilns in the China. Fuels preparation is most often performed on-site. Fuels preparation may include crushing, grinding and drying of coal. Coal is shipped wet to prevent dust formation and fire during transport. Passing hot gasses through the mill combines the grinding and drying. Coal roller mills are available for throughputs of 5.5 to 220 t/hour. Coal grinding roller mills can be found in many countries around the world, for example, Brazil, Canada, China, Denmark, Germany, Japan and Thailand. Vertical roller mills have been developed for coal grinding, and are used by over 100 plants around the world[1].

Energy/Environment/Cost/Other Benefits:

- An impact mill would consume around 45 to 60 kWh/t and a tube mill around 25 to 26 kWh/t (total system requirements).[1] Waste heat of the kiln system (for example the clinker cooler) can be used to dry the coal if needed.
- Advantages of a roller mill are that its ability to handle larger sizes of coal (no pre-crushing needed) and coal types with a higher humidity and to manage larger variations in throughput. However, tube mills are preferred for more abrasive coal types.
- Electricity consumption for a vertical roller mill is estimated to be 16 to 18 kWh/t coal.[1] Electricity consumption for a bowl mill is 10 to 18 kWh/t coal,[2] and for a ball mill 30 to 50 kWh/t coal[1].
- The investment costs for a roller mill are typically higher than that of a tube mill or an impact mill, but the operation costs are also lower; roughly 20% compared to a tube mill and over 50% compared to an impact mill[1], estimating savings at 7 to 10 kWh/t coal.

Block Diagram or Photo:

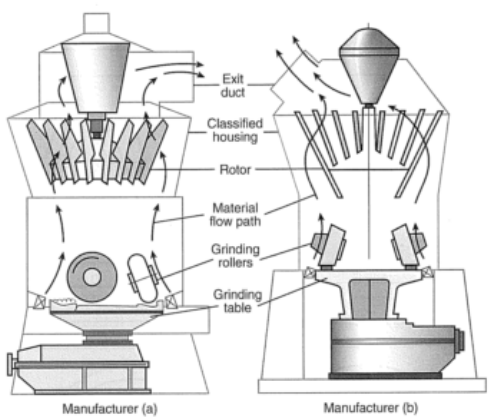

Examples of roller mills with conventional classifier, taken from Bhatty, J. I., F. M. Miller and S. H. Kosmatka (eds.) 2004. Innovations in Portland Cement Manufacturing. Portland Cement Association.

[1] Cembureau, 1997. Best Available Techniques for the Cement Industry, Brussels: Cembureau.
[2] Bhatty, J. I., F. M. Miller and S. H. Kosmatka (eds.) 2004. Innovations in Portland Cement Manufacturing. Portland Cement Association.

Case Studies:

- Lehigh Portland Cement installed a vertical roller mill for coal grinding in 1999 at the Union Bridge, Maryland, U.S. plant.
- Blue Circle cement has ordered a vertical roller mill for the new kiln line V at the Roberta plant in Calera, Alabama, U.S. It has a capacity of 41.3 ton/hr and was commissioned in early 2001.

Improved Refractories for Clinker Making in All Kilns

Description: There can be considerable heat losses through the shell of a cement kiln, especially in the burning zone. The use of better insulating refractories (for example Lytherm) can reduce heat losses.[1] Refractory choice is the function of insulating qualities of the brick and the ability to develop and maintain a coating. The coating helps to reduce heat losses and to protect the burning zone refractory bricks. Refractories protect the steel kiln shell against heat, chemical and mechanical stress. The choice of refractory material depends on the combination of raw materials, fuels and operating conditions.

Refractories are made by foreign companies operating in China, particularly in the Liaoning Province, such as Refratechnik (German) and RHI (Austrian). China also produces medium and smaller refractories but the energy efficiency is poorer than those made by the leading international companies.[2]

Energy/Environment/Cost/Other Benefits:

- Extended lifetime of the higher quality refractories will lead to longer operating periods and reduced lost production time between relining of the kiln, and, hence, offset their higher costs.[3]
- The use of improved kiln-refractories may also lead to improved reliability of the kiln and reduced downtime, reducing production costs considerably, and reducing energy needs during start-ups.
- Estimates suggest that the development of high-temperature insulating linings for the kiln refractories can reduce fuel use by 0.12 to 0.4 GJ/t (4.1 to 13 kgce/t) of clinker.[4]
- Costs for insulation systems are estimated to be $0.25/annual tonne clinker capacity. [5]
- Structural considerations may limit the use of new insulation materials.

Block Diagram or Photo:

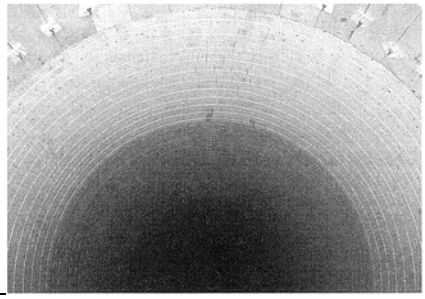

Example of a rotary kiln lined with refractories, taken from Bhatty, J. I., F. M. Miller and S. H. Kosmatka (eds.) 2004. Innovations in Portland Cement Manufacturing. Portland Cement Association.

[1] Venkateswaran, S.R. and H.E. Lowitt. 1988. The U.S. Cement Industry, An Energy Perspective, U.S. Department of Energy, Washington D.C., USA.
[2] Cui, Y., 2006. Personal communication with Prof. Cui Yuansheng, VP of the Institute of Technical Information for Building Materials Industry of China (ITIBMIC).
[3] Schmidt, H-J. 1998. Chrome Free Basic Bricks – A Determining Factor in Cement Production Proc.1998 IEEE-IAS/PCA Cement Industry Technical Conference: 155-167; Van Oss, H. 2002. Personal Communication. U.S. Geological Survey, March – May, 2002.
[4] Lowes, T.M. and Bezant, K.W. 1990. Energy Management in the UK Cement Industry Energy Efficiency in the Cement Industry (Ed. J. Sirchis), London, England: Elsevier Applied Science.; COWIconsult, March Consulting Group and MAIN. 1993. Energy Technology in the Cement Industrial Sector, Report prepared for CEC - DG-XVII, Brussels, April 1992.; Venkateswaran, S.R. and H.E. Lowitt. 1988. The U.S. Cement Industry, An Energy Perspective, U.S. Department of Energy, Washington D.C., USA.
[5] Lesnikoff, G. 1999. Hanson Cement, Cupertino, CA, personal communication.

Case Studies:

- In one vertical shaft kiln in South China, a new energy-efficient lining was applied. Fuel consumption was reduced from 930 to 950 kcal/kg clinker (133 to 136 kgce/t clinker) to 800 to 820 kcal/kg clinker (116 to 119 kgce/t clinker), a savings of approximately 14%.[6] The output also increased by about 1 tonne per hour.
- Another cement plant in North China utilizing vertical shaft kilns employed energy efficient lining and found a reduction of fuel use from 900 to 920 kcal/kg clinker (130 kgce/t clinker) to about 800 kcal/kg clinker (116 kgce/t clinker).[7] The output of the kiln also increased per unit of raw materials input.
- Changjiang Cement Factory in Zhejiang City, Jangsu Province applied energy saving kiln lining to its shaft kiln and found energy savings of 0.46 to 0.63 GJ/t clinker (16 to 22 kgce/t clinker).[8] In addition to these energy savings, they were able to increase production.

[6] Institute of Technical Information for Building Materials Industry (ITIBMIC). 2004. Final Report on Cement Survey. Prepared for the United Nations Industrial Development Organization (UNIDO) for the Contract Entitled Cement Sub-sector Survey for the Project Energy Conservation and GHG Emissions Reduction in Chinese TVEs-Phase II. Contract no. 03/032/ML, P.O. No. 16000393, September 9.

[7] Institute of Technical Information for Building Materials Industry (ITIBMIC). 2004. Final Report on Cement Survey. Prepared for the United Nations Industrial Development Organization (UNIDO) for the Contract Entitled Cement Sub-sector Survey for the Project Energy Conservation and GHG Emissions Reduction in Chinese TVEs-Phase II. Contract no. 03/032/ML, P.O. No. 16000393, September 9.

[8] Institute of Technical Information for Building Materials Industry (ITIBMIC). 2004. Final Report on Cement Survey. Prepared for the United Nations Industrial Development Organization (UNIDO) for the Contract Entitled Cement Sub-sector Survey for the Project Energy Conservation and GHG Emissions Reduction in Chinese TVEs-Phase II. Contract no. 03/032/ML, P.O. No. 16000393, September 9.

Energy Management and Process Control Systems for Clinker Making in All Kilns

Description: Heat from the kiln may be lost through non-optimal process conditions or process management. Automated computer control systems may help to optimize the combustion process and conditions. Improved process control will also help to improve the product quality and grindability, for example reactivity and hardness of the produced clinker, which may lead to more efficient clinker grinding. A uniform feed allows for steadier kiln operation, thereby saving ultimately on fuel requirements. In cement plants across the world, different systems are used, marketed by different manufacturers. Most modern systems use so-called 'fuzzy logic' or expert control, or rule-based control strategies. If automatic controls are going to be successfully implemented, they must link all processes from mine management to raw materials input into the kiln to kiln fuel input in order to realize stable production; none should be done manually.[1]

Expert control systems do not use a modeled process to control process conditions, but try to simulate the best human operator, using information from various stages in the process. One such system, called ABB LINKman, was originally developed in the United Kingdom by Blue Circle Industries and SIRA. [2] The LINKman system has successfully been used in rotary kilns (both wet and dry). Other developers also market 'fuzzy logic' control systems, for example, F.L. Smidth (Denmark) Krupp Polysius (Germany) and Mitsui Mining (Japan). An alternative to expert systems or fuzzy logic is model-predictive control using dynamic models of the processes in the kiln. Additional process control systems include the use of on-line analyzers that permit operators to instantaneously determine the chemical composition of raw materials being processed, thereby allowing for immediate changes in the blend of raw materials. Several companies in China provide optimized information technology for energy management and process control, such as the ABB or the Chinese software company Yun Tian.[3]

In cement plants across the world, different systems are used, marketed by different manufacturers. After their first application in 1985, modern control systems now find wider application and can be found in many European plants. Most technologies for this measure are made by international companies such as Siemens and ABB; few if any are made by domestic companies.[4]

Energy/Environment/Cost/Other Benefits:

- Energy savings from process control systems may vary between 2.5% and 10%[5], and the typical savings are estimated to be 2.5 to 5%.

---

[1] Institute of Technical Information for Building Materials Industry (ITIBMIC). 2004. Final Report on Cement Survey. Prepared for the United Nations Industrial Development Organization (UNIDO) for the Contract Entitled Cement Sub-sector Survey for the Project Energy Conservation and GHG Emissions Reduction in Chinese TVEs-Phase II. Contract no. 03/032/ML, P.O. No. 16000393, September 9.

[2] Energy Technology Support Unit (ETSU). 1988. High Level Control of a Cement Kiln, Energy Efficiency Demonstration Scheme, Expanded Project Profile 185, Harwell, United Kingdom.

[3] Wang, Yanjia of Tsinghua University, Beijing, China. 2006b. Personal written communication.

[4] Cui, Y., 2004 and 2006. Personal communication with Prof. Cui Yuansheng, VP of the Institute of Technical Information for Building Materials Industry of China (ITIBMIC).

[5] Energy Technology Support Unit (ETSU). 1988. High Level Control of a Cement Kiln, Energy Efficiency Demonstration Scheme, Expanded Project Profile 185, Harwell, United Kingdom; Haspel, D., and W. Henderson. 1993. A New Generation of Process Optimisation Systems, International Cement Review, June: 71-73; Ruby, C.W. 1997. A New Approach to Expert Kiln Control. Proc.1997 IEEE/PCA Cement

- All control systems described here report typical energy savings of 3 to 8%, while improving productivity of the kiln. For example, Krupp Polysius reports typical savings of 2.5 – 5%, with similar increased throughput and increased refractory life of 25 – 100%.
- The economics of advanced process control systems are very good and payback periods can be as short as 3 months.[6]
- A payback period of 2 years or less is typical for kiln control systems, while often much lower payback periods are achieved.[7]
- Process control of the clinker cooler can help to improve heat recovery, material throughput and improved control of free lime content in the clinker, and to reduce NOx emissions.[8]Installing a Process Perfecter® (of Pavilion Technologies Inc.) has increased cooler throughput by 10%, reduced free lime by 30% and reduced energy by 5%, while reducing NOx emissions by 20%.[9] The installation costs equal $0.35/annual tonne of clinker, with an estimated payback period of 1 year.[10]
- Combustion control in vertical kilns is more difficult than in rotary kilns where the flow of raw materials is controlled by a mechanically-rotating horizontally-oriented shaft at a slight angle instead of just gravity.[11] In these kilns, operating skills and hence, proper training is more important for energy efficiency and product quality.
- Control technologies also exist for controlling the air intake. (For more information on kiln combustion system improvements and controls for VSKs, see "kiln combustion system improvements" for Clinker Production – Vertical Shaft Kilns).
- Raw materials and fuel mix can be improved by a careful analysis of the chemical and physical characteristics of each, and by automating the weighing process and the pellet production (water content and raw feed mixtures), the blending process, the kiln operation (optimizing air flow, temperature distribution, and the speed of feeding and discharging).

Block Diagram or Photo:

Industry Technical Conference XXXIX Conference Record, Institute of Electrical and Electronics Engineers: New Jersey.

[6] Energy Technology Support Unit (ETSU). 1988. High Level Control of a Cement Kiln, Energy Efficiency Demonstration Scheme, Expanded Project Profile 185, Harwell, United Kingdom.

[7] Energy Technology Support Unit (ETSU). 1988. High Level Control of a Cement Kiln, Energy Efficiency Demonstration Scheme, Expanded Project Profile 185, Harwell, United Kingdom. Martin, G. and S. McGarel. 2001a. Automation Using Model Predictive Control in the Cement Industry. Pavillion Technologies, Inc., Austin, TX (based on a paper published in International Cement Review, February: 66-67). Available at: http://www.pavtech.com/

[8] Martin, G., T. Lange, and N. Frewin. 2000. Next Generation Controllers for Kiln/Cooler and Mill Applications based on Model predictive Control and Neural Networks, Proceedings IEEE-IAS/PCA 2000 Cement Industry Technical Conference, Salt Lake City, UT, May 7th – 12th.

[9] Martin, N., E. Worrell, and L. Price. 1999. Energy Efficiency and Carbon Dioxide Emissions Reduction Opportunities in the U.S. Cement Industry. Lawrence Berkeley National Laboratory, Berkeley, CA. September. (LBNL-44182); Martin, G., S. McGarel, T. Evans, and G. Eklund. 2001. Reduce Specific Energy Requirements while Optimizing NOx Emissions Decisions in Cement with Model Predictive Control, Personal Communication from Pavilion Technologies, Inc., Austin, TX, December 3

[10] Martin, G., S. McGarel, T. Evans, and G. Eklund. 2001. Reduce Specific Energy Requirements while Optimizing NOx Emissions Decisions in Cement with Model Predictive Control, Personal Communication from Pavilion Technologies, Inc., Austin, TX, December 3

[11] Liu, F., M. Ross and S. Wang. 1995. Energy Efficiency of China's Cement Industry. Energy 20 (7): 669-681.

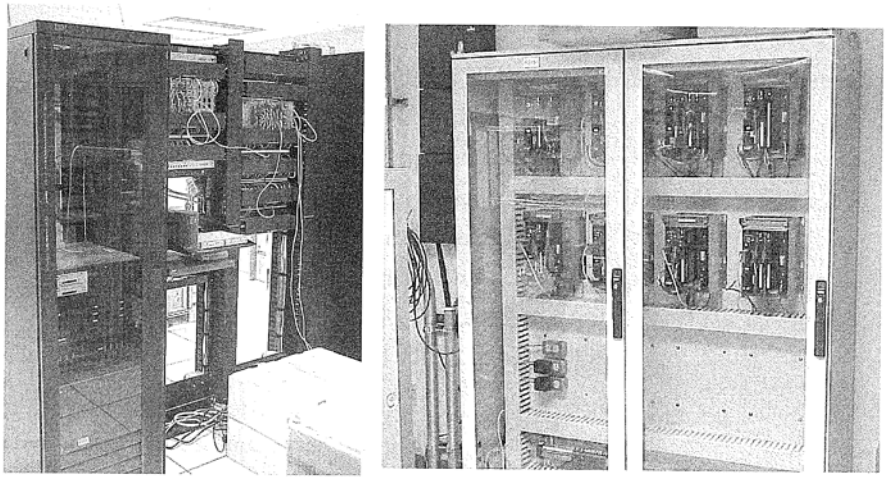

Various computer controlled systems improve operation of kiln. Images taken from Bhatty, J. I., F. M. Miller and S. H. Kosmatka (eds.) 2004. Innovations in Portland Cement Manufacturing. Portland Cement Association.

Case Studies:

- **Expert control systems.** Ash Grove implemented a fuzzy control system at the Durkee Oregon plant in 1999.
- The first ABB LINKman system was installed at Blue Circle's Hope Works in 1985 in the U.K., which resulted in a fuel consumption reduction of nearly 8%.[12] The control system required investing £203,000 (1987), equivalent to $0.3/annual tonne clinker,[13] including measuring instruments, computer hardware and training.
- A **model predictive control system** was installed at a kiln in South Africa in 1999, reducing energy needs by 4%, while increasing productivity and clinker quality. The payback period of this project is estimated to be 8 months, even with typically very low coal prices in South Africa.[14]
- **On-line analyzer:** Blue Circle's St. Marys plant (Canada) installed an on-line analyzer in 1999 in its precalciner kiln, and achieved better process management as well as fuel savings. Holderbank (1993) notes an installation cost for on-line analyzers of $0.8 to 1.7/annual tonne clinker.[15]
- **Process controls:** installation of float switches with high level limit sensors in the overhead tanks for water coolers at the Birla Cement Works, Chittorgarh in India reduced power consumption by cutting off power supply to the water pump when it fills to the high level. The pump restarts when water reaches the low level. This eliminates overflow from tank and saved 0.08 kWh/t clinker. The cost of this measure was 0.328 INR/t clinker (0.06 RMB/t clinker).
- **Fan systems management:** when production volume increased, the installation of an expanded 3-fan system to handle the vertical roller mill, the preheater and the

[12] Energy Technology Support Unit (ETSU). 1988. High Level Control of a Cement Kiln, Energy Efficiency Demonstration Scheme, Expanded Project Profile 185, Harwell, United Kingdom.
[13] Energy Technology Support Unit (ETSU). 1988. High Level Control of a Cement Kiln, Energy Efficiency Demonstration Scheme, Expanded Project Profile 185, Harwell, United Kingdom.
[14] Martin, G. and S. McGarel. 2001a. Automation Using Model Predictive Control in the Cement Industry. Pavillion Technologies, Inc., Austin, TX (based on a paper published in International Cement Review, February: 66-67). Available at: http://www.pavtech.com/
[15] Holderbank Consulting, 1993. Present and Future Energy Use of Energy in the Cement and Concrete Industries in Canada, CANMET, Ottawa, Ontario, Canada.

electrostatic precipitator at the Satna Cement Works, Birla Corporation, Limited in India helped reduce power consumption by avoiding false air entry into the preheater (from the roller mill) and saving power of the electrostatic precipitator. Power savings were 2.3 kWh/t clinker at a cost of 42 INR/t clinker (7.2 RMB/t clinker).

Adjustable Speed Drive for Kiln Fan for Clinker Making in All Kilns

Description: Adjustable or variable speed drives (ASDs) for the kiln fan result in reduced power use and reduced maintenance costs. ASDs are currently being made in China, although many of the parts and instrumentation are still being imported from Germany and/or Japan.[1]

Energy/Environment/Cost/Other Benefits:

- See case studies for detailed information on these benefits

Block Diagram or Photo:

Variable speed drive on cement kiln, image taken from
http://fp.is.siemens.de/cement/en/Solutions/Drives_ID.htm

Case Studies:

- The use of ASDs for a kiln fan at the Hidalgo plant of Cruz Azul Cement in Mexico resulted in improved operation, reliability and a reduction in electricity consumption of almost 40%.[2] for the 1,000 horsepower motors. The replacement of the damper by an ASD was driven by control and maintenance problems at the plant. The energy savings may not be typical for all plants, as the system arrangement of the fans was different from typical kiln arrangements.
- Fujimoto, (1994) notes that Lafarge Canada's Woodstock plant replaced their kiln fans with ASDs and reduced electricity use by 5.5 kWh/t of cement (6.1 kWh/t clinker).[3]
- The Zhonglida Group, operating ten cement enterprises (with both VSKs and new dry rotary kilns), installed variable speed drives in 40 large motors (over 55 kW) and over 40 of its smaller motors (< 55 KW) and found energy savings of over 30%.[4]

---

[1] Cui, Y., 2004 and 2006. Personal communication with Prof. Cui Yuansheng, VP of the Institute of Technical Information for Building Materials Industry of China (ITIBMIC).
[2] Dolores, R. and M.F. Moran. 2001. Maintenance and Production Improvements with ASDs Proc.2001 IEEE-IAS/PCA Cement Industry Technical Conference: 85-97.
[3] Fujimoto, S., 1994. Modern Technology Impact on Power Usage in Cement Plants, IEEE Transactions on Industry Applications, Vol. 30, No. 3, June.
[4] Institute of Technical Information for Building Materials Industry (ITIBMIC). 2004. Final Report on Cement Survey. Prepared for the United Nations Industrial Development Organization (UNIDO) for the

- Birla Vikas Cement Works installed a slip power recovery system for precalciner speed control (from 70 to 100% speed) in its kiln to replace a liquid rotor regulator. They found savings of 0.62 kWh/t clinker at a cost of 3 INR/t clinker (0.5 RMB/t clinker)[5].

Contract Entitled Cement Sub-sector Survey for the Project Energy Conservation and GHG Emissions Reduction in Chinese TVEs-Phase II. Contract no. 03/032/ML, P.O. No. 16000393, September 9.

[5] The United Nations Framework Convention on Climate Change (2008) CDM project documents available at: http://cdm.unfccc.int/Projects/DB/SGS-UKL1175367790.14/view

Fan Modifications and Optimization in All Kilns

Description: Increasing the inlet duct of the kiln fan can reduce friction loss and pressure loss during flow of air through the duct, saving energy. Although savings are small, modifications like these have very small capital investments.

Energy/Environment/Cost/Other Benefits:

- See case studies for detailed information on these benefits

Case Studies:

- Chittor Cement Works, Chittorgarh Company in India modified their inlet duct of the cooler fan by increasing its diameter to reduce friction and pressure loss during flow of air through the duct[1]. They found electricity savings of 0.0.048 kWh/t clinker (6 kW). Capital costs were only $0.01305 INR per tonne of clinker (0.00225 RMB/t clinker).

[1] The United Nations Framework Convention on Climate Change (2008) CDM project documents available at:

Installation or Upgrading of a Preheater to a Preheater/Precalciner Kiln for Clinker Making in Rotary Kilns

Description: An existing preheater kiln may be converted to a multi-stage preheater/precalciner kiln by adding a precalciner and, when possible an extra preheater. The addition of a precalciner will generally increase the capacity of the plant, while lowering the specific fuel consumption and reducing thermal NOx emissions (due to lower combustion temperatures in the precalciner). Using as many features of the existing plant and infrastructure as possible, special precalciners have been developed by various manufacturers to convert existing plants, for example Pyroclon®-RP by KHD in Germany. Generally, the kiln, foundation and towers are used in the new plant, while cooler and preheaters are replaced. Cooler replacement may be necessary in order to increase the cooling capacity for larger production volumes. Older precalciners can be retrofitted for energy efficiency improvement and NOx emission reduction.

Many precalciner kilns have been constructed from 2001 and are about 10 to 20% imported and 80 to 90% domestic[1]. Domestic technology, made by a few leading manufacturers in China, costs roughly 20 to 33% of the cost of imported technology but doesn't last as long. Most companies are adopting domestic technologies. Domestic technology, however, is not available for kiln sizes over 5000 tonne per day.[2]

Energy/Environment/Cost/Other Benefits:

- Fuel savings will depend strongly on the efficiency of the existing kiln and on the new process parameters (for example degree of precalcination, cooler efficiency).
- A multi-stage preheater/precalciner kiln uses approximately 3 GJ/t clinker (100 kgce/t clinker).[3]
- Average savings of new precalciners can be 0.4 GJ/t clinker (14 kgce/t clinker).[4]
- The cost of adding a precalciner and suspension preheaters is estimated to be between $9.4 to $28 U.S./ tonne clinker capacity.[5,6]
- Increased production capacity is likely to save considerably in operating costs, estimated to be $1.1/t clinker

---

[1] Cui, Y., 2004 and 2006. Personal communication with Prof. Cui Yuansheng, VP of the Institute of Technical Information for Building Materials Industry of China (ITIBMIC).

[2] Wang, Yanjia of Tsinghua University, Beijing, China. 2006b. Personal written communication.

[3] European Commission (EC). 2000. Directorate-General Joint Research Centre, Institute for Prospective Technological Studies. Integrated Pollution Prevention and Control (IPPC): Reference Document on Best Available Techniques in the Cement and Lime Manufacturing Industries. Seville, Spain. March

[4] Sauli, R.S. 1993. Rotary Kiln Modernization and Clinker Production Increase at Testi Cement Plant of S.A.C.C.I. Spa., Italy Proc. KHD Symposium '92, 2 Modern Burning Technology, KHD Humboldt Wedag, Cologne, Germany.

[5] Vleuten, F.P. van der. 1994. Cement in Development: Energy and Environment Netherlands Energy Research Foundation, Petten, The Netherlands.

[6] Jaccard, M.K. & Associates and Willis Energy Services Ltd. 1996. Industrial Energy End-Use Analysis and Conservation Potential in Six Major Industries in Canada. Report prepared for Natural Resources Canada, Ottawa, Canada.

Block Diagram or Photo:

Sample images from Chinese cement plants having rotary kilns with preheaters and precalciners.

Case Studies:

- Retrofitting the precalciner at the Lengerich plant of Dyckerhoff Zement (Germany) in 1998 reduced NOx emissions by almost 45%.[7] Similar emission reductions have been found at kilns in Germany, Italy and Switzerland. [8]
- Ash Grove's Durkee, Oregon (U.S.) original 1979 plant installed new preheaters and a precalciner in 1998, expanding production from 1500 tonnes/day to 2500 tonnes/day. The reconstruction reduced fuel consumption by 0.16 to 0.7 GJ/t clinker (5.4 to 24 kgce/t clinker),[9] while reducing NOx emissions.
- Capitol Cement (San Antonio, Texas, U.S.) replaced an older in-line precalciner with a new downdraft precalciner to improve production capacity. This was part of a larger project replacing preheaters, installing SOx emission reduction equipment, as well as increasing capacity of a roller mill. The new plant was successfully commissioned in 1999. Fuel consumption at Capitol Cement was reduced to 3.4 GJ/t clinker (116 kgce/t clinker).[10]
- The Hejiashan Cement Company, Ltd. in Jiangshan City, Zhejiang Province installed two new dry process kilns in 2001 and 2003 at a cost of 105 million RMB for a 1000 tonne per day kiln and 156 million RMB for a 1500 tonne per day kiln, respectively.[11] This equates to roughly 300 RMB/t clinker ($37 U.S./t). Power consumption is expected to be 85.87 kWh/t clinker and fuel consumption 2.5GJ/t clinker (85 kgce/t clinker) for the 1000 tonne per day kiln.
- The conversion of a plant in Italy, using the existing rotary kiln, led to a capacity increase of 80 to 100% (from 1100 tpd to 2000 to 2200 tpd), while reducing specific

[7] Mathée, H. 1999. NOx Reduction with the Prepol MSC Process at the Lengerich Plant of Dyckerhoff Zement GmbH, Polysius Teilt Mit, 208: 53-55, Krupp Polysius, Germany.
[8] Menzel, K. 1997. Experience with the Prepol-MSC Calciner and a Review of the Possibilities it Offers, Polysius Teilt Mit, 198: 29-33, Krupp Polysius, Germany.
[9] Hrizuk, M.J. 1999. Expansion is Key at Durkee, International Cement Review, May.
[10] Frailey, M.L. and K.R. Happ, 2001. Capitol Cement's Project 2000. Proceedings IEEE 2001 Cement Industry Technical Conference, May 2001.
[11] Institute of Technical Information for Building Materials Industry (ITIBMIC). 2004. Final Report on Cement Survey. Prepared for the United Nations Industrial Development Organization (UNIDO) for the Contract Entitled Cement Sub-sector Survey for the Project Energy Conservation and GHG Emissions Reduction in Chinese TVEs-Phase II. Contract no. 03/032/ML, P.O. No. 16000393, September 9.

fuel consumption from 3.6 to 3.1-3.2 GJ/t clinker (123 to 106-109 kgce/t clinker), resulting in savings of 11 to 14%. [12]

[12] Sauli, R.S. 1993. Rotary Kiln Modernization and Clinker Production Increase at Testi Cement Plant of S.A.C.C.I. Spa., Italy Proc. KHD Symposium '92, 2 Modern Burning Technology, KHD Humboldt Wedag, Cologne, Germany.

Conversion of Long Dry Kilns to Preheater/Precalciner Kilns for Clinker Making in Rotary Kilns

Description: A long dry kiln can be upgraded to the current state of the art multi-stage preheater/precalciner kiln.

Energy/Environment/Cost/Other Benefits:

- Energy savings are estimated to be 1.4 GJ/t clinker (48 kgce/t clinker) for the conversion, reflecting the difference between the average dry kiln specific fuel consumption and that of a modern preheater, pre-calciner kiln based on a study of the Canadian cement industry and the retrofit of an Italian plant.[1]
- Costs have been estimated to range from $8.6/t clinker capacity[2] to 23 to 29/t clinker capacity[1] for a pre-heater, pre-calciner kiln.

Block Diagram or Photo:

Sample images from Chinese cement plants having rotary kilns with preheaters and precalciners.

[1] Holderbank Consulting, 1993. Present and Future Energy Use of Energy in the Cement and Concrete Industries in Canada, CANMET, Ottawa, Ontario, Canada.; Sauli, R.S. 1993. Rotary Kiln Modernization and Clinker Production Increase at Testi Cement Plant of S.A.C.C.I. Spa., Italy Proc. KHD Symposium '92, Modern Burning Technology, KHD Humboldt Wedag, Cologne, Germany.

[2] Jaccard, M.K. & Associates and Willis Energy Services Ltd. 1996. Industrial Energy End-Use Analysis and Conservation Potential in Six Major Industries in Canada. Report prepared for Natural Resources Canada, Ottawa, Canada.

Dry Process Upgrade to Multi-Stage Preheater Kiln for Clinker Making in Rotary Kilns

Description: Older dry kilns may only preheat in the chain section of the long kiln, or may have single- or two-stage preheater vessels. Installing multi-stage suspension preheating (i.e. four- or five-stage) may reduce the heat losses and thus increase efficiency. Modern cyclone or suspension preheaters also have a reduced pressure drop, leading to increased heat recovery efficiency and reduced power use in fans (see low pressure drop cyclones measure).

Energy/Environment/Cost/Other Benefits:

- By installing new preheaters, the productivity of the kiln will increase, due to a higher degree of pre-calcination (up to 30 to 40%) as the feed enters the kiln.
- Also, the kiln length may be shortened by 20 to 30% thereby reducing radiation losses .[1]
- As the capacity increases, the clinker cooler may have to be adapted to be able to cool the large amounts of clinker.
- The conversion of older kilns is attractive when the old kiln needs replacement and a new kiln would be too expensive, assuming that limestone reserves are adequate.
- Energy savings depend strongly on the specific energy consumption of the dry process kiln to be converted as well as the number of preheaters to be installed. Energy savings are estimated to be 0.9 GJ/t clinker (31 kgce/t clinker) for the conversion which reflects the difference between the average dry kiln specific fuel consumption and that of a modern preheater kiln.[2]
- Specific costs are estimated to be $39 to 41/annual tonne clinker capacity for conversion to a multi-stage preheater kiln[2] or $28/annual tonne clinker capacity to install suspension pre-heaters.[3]

Block Diagram or Photo:

View of a cement kiln and preheater tower. Picture courtesy Castle Cement, at http://www.understanding-cement.com/manufacturing.html

[1] Van Oss, H. 1999. Personal Communication. U.S. Geological Survey, February 9.
[2] Holderbank Consulting, 1993. Present and Future Energy Use of Energy in the Cement and Concrete Industries in Canada, CANMET, Ottawa, Ontario, Canada.
[3] Vleuten, F.P. van der. 1994. Cement in Development: Energy and Environment Netherlands Energy Research Foundation, Petten, The Netherlands.

Case Studies:

- Cement kilns in the former German Democratic Republic were rebuilt by Lafarge to replace four dry process kilns originally constructed in 1973 and 1974. In 1993 and 1995, three kilns were equipped with four-stage suspension preheaters. The specific fuel consumption was reduced from 4.1 to 3.6 GJ/t clinker (140 to 123 kgce/t clinker), while the capacity of the individual kilns was increased from 1650 to 2500 tpd.[4] In the same project, the power consumption was reduced by 25%, due to the replacement of fans and the finish grinding mill.

[4] Duplouy, A. and J. Trautwein. 1997. Umbau und Optimierung der Drehofenanlagen im Werk Karsdorf der Lafarge Zement Gmbh. ZKG International 4 50: 190-197.

Increasing Number of Preheater Stages in Rotary Kilns

Description: Increasing the number of stages of the preheater will decrease heat losses and increase efficiency of the kiln.

Energy/Environment/Cost/Other Benefits:

- By installing new preheaters, the productivity of the kiln will increase, due to a higher degree of pre-calcination (up to 30 to 40%) as the feed enters the kiln.
- Energy savings depend strongly on the specific energy consumption of the dry process kiln to be converted as well as the number of preheaters to be installed.
- See other Rotary Kiln Preheater/Precalciner measures for additional benefits

Block Diagram or Photo:

View of a cement kiln and preheater tower. Picture courtesy Castle Cement, at http://www.understanding-cement.com/manufacturing.html

Case Studies:

- Vikram Cement in India upgraded a preheater from five to six stages[1]. They found fuel savings of 0.111 GJ/t (3.8 kgce/t) with increased electricity use of 1.17 kWh/t. Capital costs were $110.5 INR per tonne of clinker (19.RMB/t clinker).

[1] The United Nations Framework Convention on Climate Change (2008) CDM project documents available at: http://cdm.unfccc.int/Projects/DB/SGS-UKL1175350601.7/view

Conversion to Reciprocating Grate Cooler for Clinker Making in Rotary Kilns

Description: Four main types of coolers are used in the cooling of clinker: (1) shaft; (2) rotary; (3) planetary; and, (4) reciprocating grate coolers. There are no longer any rotary or shaft coolers in operation in North America; in China, there are few if any rotary or shaft coolers. [1] However, some reciprocating grate coolers may still be in operation. The grate cooler is the modern variant and is used in almost all modern kilns.

Energy/Environment/Cost/Other Benefits:

- The advantages of the grate cooler are its large capacity (allowing large kiln capacities) and efficient heat recovery (the temperature of the clinker leaving the cooler can be as low as 83°C, instead of 120 to 200°C, which is expected from planetary coolers. [2]
- Tertiary heat recovery (needed for precalciners) is impossible with planetary coolers, limiting heat recovery efficiency.[3]
- Grate coolers recover more heat than do the other types of coolers.
- For large capacity plants, grate coolers are the preferred equipment. For plants producing less than 500 tonnes per day the grate cooler may be too expensive.[4] Replacement of planetary coolers by grate coolers is not uncommon.[5]
- Modern reciprocating coolers have a higher degree of heat recovery than older variants, increasing heat recovery efficiency to 60 to 71%[6], while reducing fluctuations in recuperation efficiency (i.e. increasing productivity of the kiln).
- When compared to a planetary cooler, additional heat recovery is possible with grate coolers at an extra power consumption of approximately 3 to 6 kWh/t clinker.[6, 7]The savings are estimated to be up to 8% of the fuel consumption in the kiln.[8]
- Cooler conversion is generally economically attractive only when installing a precalciner, which is necessary to produce the tertiary air, or when expanding production capacity.
- The cost of a cooler conversion is estimated to be between $.044 and $5.5/annual tonne clinker capacity, depending on the degree of reconstruction needed.
- Annual operation costs increase by $0.11/t clinker.[9]

---

[1] Cui, Y., 2004 and 2006. Personal communication with Prof. Cui Yuansheng, VP of the Institute of Technical Information for Building Materials Industry of China (ITIBMIC).

[2] Vleuten, F.P. van der. 1994. Cement in Development: Energy and Environment Netherlands Energy Research Foundation, Petten, The Netherlands.

[3] Cembureau, 1997b. Best Available Techniques for the Cement Industry, Brussels: Cembureau.

[4] COWIconsult, March Consulting Group and MAIN. 1993. Energy Technology in the Cement Industrial Sector, Report prepared for CEC - DG-XVII, Brussels, April 1992.

[5] Alsop, P.A. and J.W. Post. 1995. The Cement Plant Operations Handbook, (First edition), Tradeship Publications Ltd., Dorking, UK

[6] Bhatty, J. I., F. M. Miller and S. H. Kosmatka (eds.) 2004. Innovations in Portland Cement Manufacturing. Portland Cement Association.

[7] COWIconsult, March Consulting Group and MAIN. 1993. Energy Technology in the Cement Industrial Sector, Report prepared for CEC - DG-XVII, Brussels, April 1992; Vleuten, F.P. van der. 1994. Cement in Development: Energy and Environment Netherlands Energy Research Foundation, Petten, The Netherlands.

[8] Vleuten, F.P. van der. 1994. Cement in Development: Energy and Environment Netherlands Energy Research Foundation, Petten, The Netherlands.

Block Diagram or Photo:

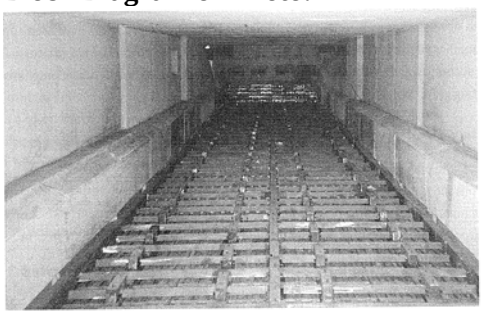

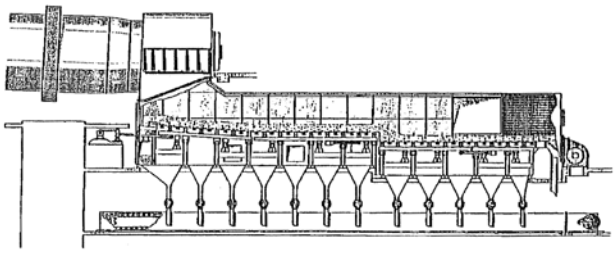

Grate clinker cooler photograph and reciprocating grate cooler diagram, both images taken from Bhatty, J. I., F. M. Miller and S. H. Kosmatka (eds.) 2004. Innovations in Portland Cement Manufacturing. Portland Cement Association.

Case Studies:

- In China, the Liulihe Cement Factory implemented a TCIDRI third generation grate cooler and achieved a heat recovery rate of over 72% on a 2500 tonne/day precalciner kiln.[10] This aerated beam grate cooler also saves water by replacing the water spray cooling with air cooling.[11]
- The Lafarge Alpena, Michigan (U.S.) Plant changed its grate cooler to accommodate an increase in production rate of 10% and combat rising maintenance costs, obsolete parts, and poor operational efficiencies of the current grate cooler. They replaced the existing oscillating grate cooler with a new efficient grate cooler that utilizes air beam technology. Audited cooler losses were 207 MJ/t (7.06 kgce/t). Power consumption was 6.6 kWh/t. Clinker discharge temperatures after the breaker are lower than 56°C above ambient. The fuel consumption reduction resulting from the cooler installation was approximately 3%[12]

---

[9] Jaccard, M.K. & Associates and Willis Energy Services Ltd. 1996. Industrial Energy End-Use Analysis and Conservation Potential in Six Major Industries in Canada. Report prepared for Natural Resources Canada, Ottawa, Canada.

[10] Institute of Technical Information for Building Materials Industry (ITIBMIC). 2004. Final Report on Cement Survey. Prepared for the United Nations Industrial Development Organization (UNIDO) for the Contract Entitled Cement Sub-sector Survey for the Project Energy Conservation and GHG Emissions Reduction in Chinese TVEs-Phase II. Contract no. 03/032/ML, P.O. No. 16000393, September 9.

[11] Institute of Technical Information for Building Materials Industry (ITIBMIC). 2004. Final Report on Cement Survey. Prepared for the United Nations Industrial Development Organization (UNIDO) for the Contract Entitled Cement Sub-sector Survey for the Project Energy Conservation and GHG Emissions Reduction in Chinese TVEs-Phase II. Contract no. 03/032/ML, P.O. No. 16000393, September 9.

[12] Bump, J. A. of LaFarge Corp. (1996). New cooler installed at Lafarge Alpena Plant: Fuller Controlled Flow Grate (CFG) Clinker Cooler (Cement Plant). Cement Industry Technical Conference, 1996. XXXVIII Conference Record., IEEE/PCA. April 14-18, 1996.

Kiln Combustion System Improvements for Clinker Making in Rotary Kilns

Description: Fuel combustion systems in kilns can be contributors to kiln inefficiencies with such problems as poorly adjusted firing, incomplete fuel burn-out with high CO formation, and combustion with excess air.[1] Improved combustion systems aim to optimize the shape of the flame, the mixing of combustion air and fuel and reducing the use of excess air. Various approaches have been developed. Lowes and Bezant, (1990) discuss advancements from combustion technology that improve combustion through the use of better kiln control. For rotary kilns, the Gyro-Therm technology was originally developed at the University of Adelaide (Australia), and can be applied to gas burners or gas/coal dual fuel. The Gyro-Therm burner uses a patented "precessing jet" technology. The nozzle design produces a gas jet leaving the burner in a gyroscopic-like precessing motion. This stirring action produces rapid large scale mixing in which pockets of air are engulfed within the fuel envelope without using high velocity gas or air jets. The combustion takes place in pockets within the fuel envelope under fuel rich conditions. This creates a highly luminous flame, ensuring good irradiative heat transfer.

Energy/Environment/Cost/Other Benefits:

- For rotary kilns, the Gyro-Therm technology improves gas flame quality while reducing NOx emissions.
- Costs for the Gyro-Therm vary by installation. An average cost of $1/annual tonne clinker capacity is assumed based on reported costs in demonstration projects.

Block Diagram or Photo:

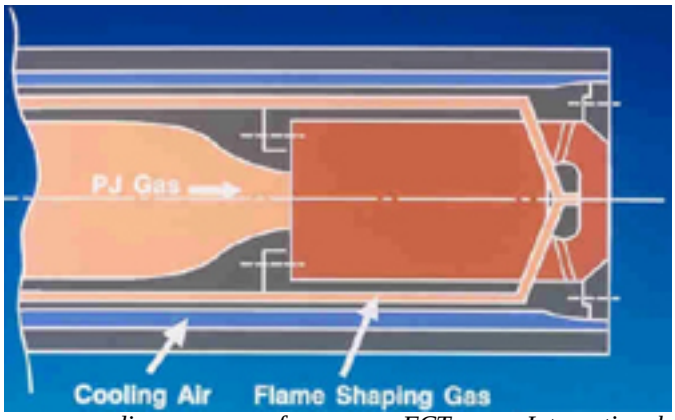

Gyro-therm burner, diagram from FCT International website at http://www.fctinternational.com/splash/about_fct/fct_combustion/products_fct_combustion/gyrotherm/body.htm

Case Studies:

- Fuel savings of up to 10% have been demonstrated for the use of flame design techniques to eliminate reducing conditions in the clinkering zone of the kiln in a Blue Circle plant .[2]

---

[1] Venkateswaran, S.R. and H.E. Lowitt. 1988. The U.S. Cement Industry, An Energy Perspective, U.S. Department of Energy, Washington D.C., USA.

[2] Lowes, T.M. and Bezant, K.W. 1990. Energy Management in the UK Cement Industry Energy Efficiency in the Cement Industry (Ed. J. Sirchis), London, England: Elsevier Applied Science.

- One technique developed in the U.K. for flame control resulted in fuel savings of 2 to 10% depending on the kiln type. [3]
- A demonstration project of the Gyro-Therm technology at an Adelaide Brighton plant in Australia found average fuel savings between 5 and 10% as well as an increase in output of 10% .[4]
- Another demonstration project of the Gyro-Therm technology at the Ash Grove plant in the U.S. (Durkee, Oregon) found fuel savings between 2.7% and 5.7% with increases in output between 5 and 9%.[5,6]

---

[3] Venkateswaran, S.R. and H.E. Lowitt. 1988. The U.S. Cement Industry, An Energy Perspective, U.S. Department of Energy, Washington D.C., USA.

[4] Centre for the Analysis and Dissemination of Demonstrated Energy Technologies (CADDET), International Energy Agency. 1997. Revolutionary low-NOx high-efficiency gas burner, Sittard, the Netherlands: CADDET.

[5] Centre for the Analysis and Dissemination of Demonstrated Energy Technologies (CADDET), International Energy Agency. 1997. Revolutionary low-NOx high-efficiency gas burner, Sittard, the Netherlands: CADDET.

[6] Videgar, R., Rapson, D. and Dhanjal, S., 1997. Gyro-therm Technology Boosts Cement Kiln Output, Efficiency and Cuts NOx Emissions. Proceedings 1997 IEEE/PCA Cement Industry Technical Conference XXXIX Conference Record, Institute of Electrical and Electronics Engineers: New Jersey.

Indirect Firing for Clinker Making in Rotary Kilns

Description: Historically the most common firing system is the direct-fired system. Coal is dried, pulverized and classified in a continuous system, and fed directly to the kiln. This can lead to high levels of primary air (up to 40% of stoichiometric). These high levels of primary air limit the amount of secondary air introduced to the kiln from the clinker cooler. Primary air percentages vary widely, and non-optimized matching can cause severe operational problems with regard to creating reducing conditions on the kiln wall and clinker, refractory wear and reduced efficiency due to having to run at high excess air levels to ensure effective burnout of the fuel within the kiln. In more modern cement plants, indirect fired systems are most commonly used. In these systems, neither primary air nor coal is fed directly to the kiln. All moisture from coal drying is vented to the atmosphere and the pulverized coal is transported to storage via cyclone or bag filters. Pulverized coal is then densely conveyed to the burner with a small amount of primary transport air.[1] As the primary air supply is decoupled from the coal mill in multi-channel designs, lower primary air percentages are used, normally between 7 and 12% of stoichiometric air[2]. The multi-channel arrangement also allows for a degree of flame optimization. This is an important feature if a range of fuels is fired. Input conditions to the multi-channel burner must be optimized to secondary air and kiln aerodynamics for optimum operation.[3]

Energy/Environment/Cost/Other Benefits:

- The optimization of the combustion conditions will lead to reduced NOx emissions, better operation with varying fuel mixtures, and reduced energy losses.
- Excess air infiltration is estimated to result in heat losses equal to 75 MJ/t (2.6 kgce/t) of clinker. Assuming a reduction of excess air between 20% and 30%, indirect firing may lead to fuel savings of 15 to 22 MJ/t (0.51 to 0.75 kgce/t) of clinker.
- The advantages of improved combustion conditions will lead to a longer lifetime of the kiln refractories and reduced NOx emissions. These co-benefits may result in larger cost savings than the energy savings alone.
- The disadvantage of an indirect firing system is the additional capital cost.

[1] Smart, J. and B. Jenkins. 2000. Combustion in the Rotary Kiln, The Combustion Institute, Leeds, UK. Available at: http://www.chemeng.ucl.ac.uk/research/combustion/nl2000_1/nl00_1_9.html
[2] Bhatty, J. I., F. M. Miller and S. H. Kosmatka (eds.) 2004. Innovations in Portland Cement Manufacturing. Portland Cement Association.
[3] Smart, J. and B. Jenkins. 2000. Combustion in the Rotary Kiln, The Combustion Institute, Leeds, UK. Available at: http://www.chemeng.ucl.ac.uk/research/combustion/nl2000_1/nl00_1_9.html

Block Diagram or Photo:

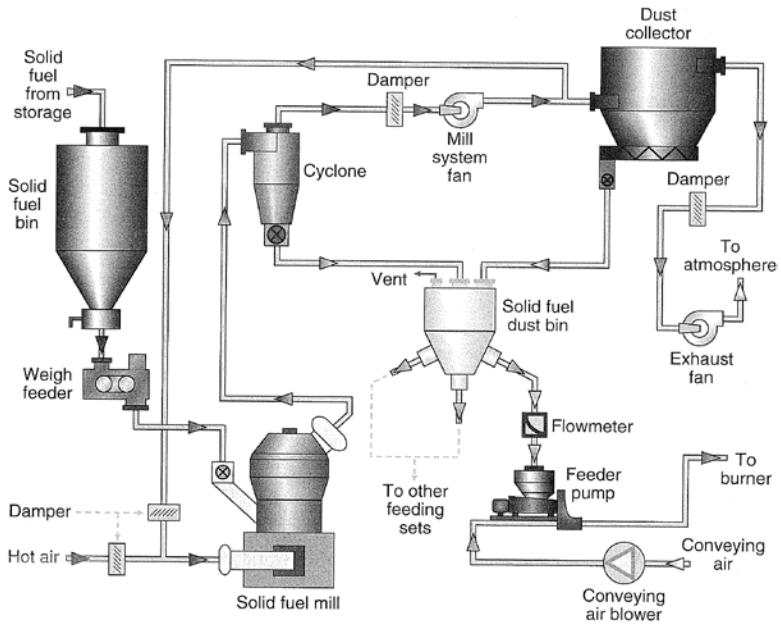

Diagram of an indirect firing system, taken from Bhatty, J. I., F. M. Miller and S. H. Kosmatka (eds.) 2004. Innovations in Portland Cement Manufacturing. Portland Cement Association.

Case Studies:

- In 1997, California Portland's plant in Colton, California (U.S.) implemented an indirect firing system for their plant, resulting in NOx emission reductions of 30 to 50%, using a mix of fuels including tires. The investment costs of the indirect firing system were $5 million for an annual production capacity of 680,000 tonnes clinker, or $7.4/t clinker.

Optimize Heat Recovery/Upgrade Clinker Cooler for Clinker Making in Rotary Kilns

Description: The clinker cooler drops the clinker temperature from 1200°C down to 100°C. The most common cooler designs are of the planetary (or satellite), traveling and reciprocating grate type. All coolers heat the secondary air for the kiln combustion process and sometimes also tertiary air for the precalciner.[1] Reciprocating grate coolers are the modern variant and are suitable for large-scale kilns (up to 10,000 tpd). Grate coolers use electric fans and excess air. The highest temperature portion of the remaining air can be used as tertiary air for the precalciner. Rotary coolers (used for approximately 5% of the world clinker capacity for plants up to 2200 to 5000 tpd) and planetary coolers (used for 10% of the world capacity for plants up to 3300 to 4400 tpd) do not need combustion air fans and use little excess air, resulting in relatively lower heat losses. [2] (For more information about grate coolers, see Conversion to Reciprocating Grate Cooler for Clinker Making in Rotary Kilns measure).

Energy/Environment/Cost/Other Benefits:

- Grate coolers may recover between 1.3 and 1.6 GJ/t (44 to 55 kgce/t) clinker sensible heat.[3] Heat recovery can be improved through reduction of excess air volume,[4] control of clinker bed depth and new grates such as ring grates. [5]
- Improving heat recovery efficiency in the cooler results in fuel savings, but may also influence product quality and emission levels.
- Control of cooling air distribution over the grate may result in lower clinker temperatures and high air temperatures.
- Additional heat recovery results in reduced energy use in the kiln and precalciner, due to higher combustion air temperatures.
- Birch, (1990) notes a savings of 0.05 to 0.08 GJ/t (2 to 3 kgce/t) clinker through the improved operation of the grate cooler, while Holderbank, (1993) notes savings of 0.16 GJ/t (5.4 kgce/t) clinker for retrofitting a grate cooler.[6] COWIconsult et al. (1993) note savings of 0.08 GJ/t (3 kgce/t) clinker but an increase in electricity use of 2.0 kWh/t clinker.[7]

---

[1] Alsop, P.A. and J.W. Post. 1995. The Cement Plant Operations Handbook, (First edition), Tradeship Publications Ltd., Dorking, UK

[2] Buzzi, S. and G. Sassone. 1993. Optimization of Clinker Cooler Operation, Proc. VDZ Kongress 1993: Verfahrenstechnik der Zementherstellung Bauverlag, Wiesbaden, Germany: 296-304; Vleuten, F.P. van der. 1994. Cement in Development: Energy and Environment Netherlands Energy Research Foundation, Petten, The Netherlands.

[3] Buzzi, S. and G. Sassone. 1993. Optimization of Clinker Cooler Operation, Proc. VDZ Kongress 1993: Verfahrenstechnik der Zementherstellung Bauverlag, Wiesbaden, Germany: 296-304

[4] Alsop, P.A. and J.W. Post. 1995. The Cement Plant Operations Handbook, (First edition), Tradeship Publications Ltd., Dorking, UK

[5] Buzzi, S. and G. Sassone. 1993. Optimization of Clinker Cooler Operation, Proc. VDZ Kongress 1993: Verfahrenstechnik der Zementherstellung Bauverlag, Wiesbaden, Germany: 296-304; Lesnikoff, G. 1999. Hanson Cement, Cupertino, CA, personal communication.

[6] Birch, E. 1990. Energy Savings in Cement Kiln Systems Energy Efficiency in the Cement Industry (Ed. J. Sirchis), London, England: Elsevier Applied Science: 118-128; Holderbank Consulting, 1993. Present and Future Energy Use of Energy in the Cement and Concrete Industries in Canada, CANMET, Ottawa, Ontario, Canada.

[7] COWIconsult, March Consulting Group and MAIN. 1993. Energy Technology in the Cement Industrial Sector, Report prepared for CEC - DG-XVII, Brussels, April 1992.

- The costs of this measure are assumed to be half the costs of the replacement of the planetary with a grate cooler, or $0.22/annual tonne clinker capacity.
- A recent innovation in clinker coolers is the installation of a static grate section at the hot end of the clinker cooler. This has resulted in improved heat recovery and reduced maintenance of the cooler.
- Modification of the cooler would result in improved heat recovery rates of 2 to 5% over a conventional grate cooler.
- Investments are estimated to be $0.11 to $0.33/annual tonne clinker capacity.[8]

Block Diagram or Photo:

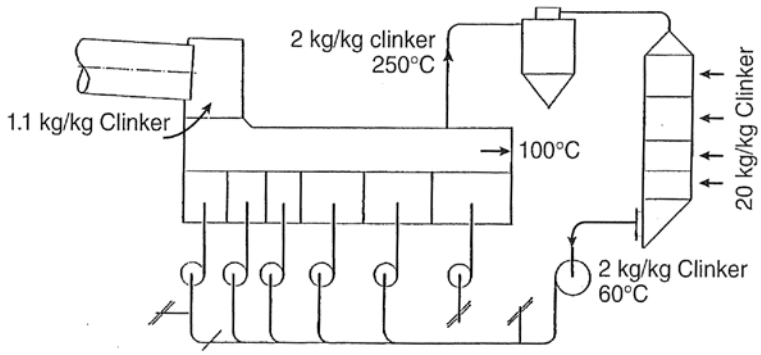

Grate clinker cooler with recirculation of excess air diagram, taken from Bhatty, J. I., F. M. Miller and S. H. Kosmatka (eds.) 2004. Innovations in Portland Cement Manufacturing. Portland Cement Association.

- **Case Studies:**Binani Cement in India modified a clinker cooler for increased heat recovery and found fuel savings of 0.062 GJ/t clinker (2 kgce/t clinker)[9].

[8] Young, G. 2002. Personal communication from Gerald I. Young, Penta Engineering Corp., St. Louis Missouri, March.
[9] The United Nations Framework Convention on Climate Change (2008) CDM project documents available at: http://cdm.unfccc.int/Projects/DB/SGS-UKL1159866250.93/view

Seal Replacement for Clinker Making in Rotary Kilns

Description: Seals are used at the kiln inlet and outlet to reduce false air penetration, as well as heat losses. Seals may start leaking, increasing the heat requirement of the kiln. Most often pneumatic and lamella-type seals are used, although other designs are available (for example spring-type). Although seals can last up to 10,000 to 20,000 hours, regular inspection may be needed to reduce leaks. This technology is produced and available domestically in China.[1]

Energy/Environment/Cost/Other Benefits:

- Energy losses resulting from leaking seals may vary, but are generally relatively small.
- Payback period for improved maintenance of kiln seals is estimated to be ≤6 months.[2]

Block Diagram or Photo:

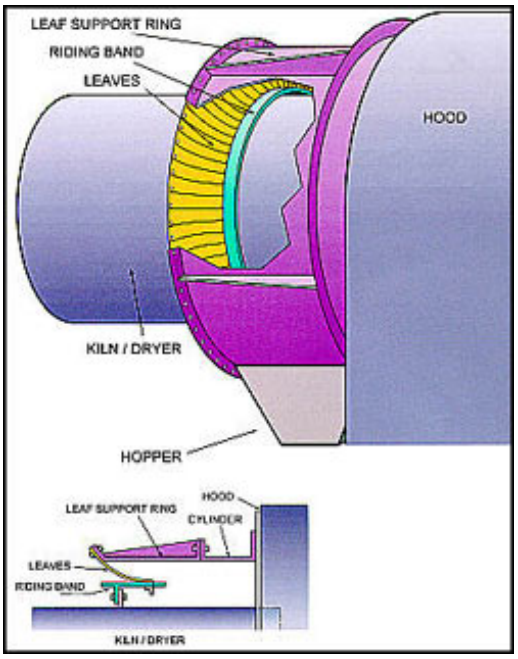

Photo of Polysius kiln seals, taken from website at http://www.polysiususa.com/html/HTML/Cement/Children/Sub/InletOutletSeals.htm. Diagram of Phillips Enviro Seal, taken from Phillips website at http://216.216.92.11/profile/default.cfm?content=3010200

Case Studies:

- Philips Kiln Services (2001) reports that upgrading the inlet pneumatic seals at a relatively modern plant in India (Maihar Cement), reduced fuel consumption in the kiln by 0.4% (0.011 GJ/t clinker or 0.38 kgce/t clinker). [3]

---

[1] Cui, Y., 2004 and 2006. Personal communication with Prof. Cui Yuansheng, VP of the Institute of Technical Information for Building Materials Industry of China (ITIBMIC).

[2] Canadian Lime Institute. 2001. Energy Efficiency Opportunity Guide in the Lime Industry, Office of Energy Efficiency, Natural Resources Canada, Ottawa, ON.

[3] Philips Kiln Services. 2001. Philips Enviro-Seal, Case Study – M/S Maihar cement, Available at: http://www.kiln.com, accessed November 2001.

Low Temperature Heat Recovery for Power Generation[1] for Clinker Making in Rotary Kilns

Description: Despite government policies to promote adoption of the technology (through the *China Medium and Long Term Energy Conservation Plan*, for example), using low temperature waste heat for power generation has not been widely adopted by Chinese cements plants[2] although 45 cement rotary kilns have already adopted this measure.[3] Even many large-scale rotary kilns built after 2003 do not use this technology.

Energy/Environment/Cost/Other Benefits:

- Pan (2005) estimates a cost for imported (Japanese) technology of 18,000 to 22,000 RMB ($2,250 to $2,750) per kW with an installation capacity over 6 MW.[4]
- Chinese domestic technology was developed in 1996 and is currently available from three Chinese companies: Tianjin Cement Industry Design & Research Institute Co., Ltd., Zhongxin Heavy Machine Company, and Huaxiao Resource Co. Ltd. All three companies have on-going demonstration programs in Chinese cement plants. Installation cost of domestic technology and equipment is currently about 10,000 RMB ($1,250) per kW.
- The installation cost would be a bit lower if kilns and generation system are constructed simultaneously.
- For a 2000 tonne per day (730,000 annual tonne) kiln capacity, about 20 kWh/t clinker of electricity could be generated for an investment of 20 to 30 million RMB.[5]
- Generating capacity of domestic technology is approximated to be 24 to 32 kWh and foreign technology about 28 to 36 kWh.[6]

---

[1] The adoption of low temperature waste heat recovery for electricity production in cement plants changes the temperature profile of the flue gas which may impact the low-temperature, catalytic dioxin formation reactions. Heat recovery from waste-to-energy boilers increases the residence time for the flue gas at the dioxin formation temperature window (700 -200 C) increases dioxin formation. Flue gas cooling temperature profile is one the important factors determining dioxin formation potential of a combustion facility. Some hazardous waste incinerators use rapid flue gas quenching to reduce residence time of the flu gas passing through the formation window for controlling dioxin formation. On the other hand, it may be due to less boiler surface area in the optimum temperature window in quenched vs. non-quenched systems, rather than a gas residence time. The surface area tends to accumulate reactive carbon and trace metals. More area likely means higher D/F concentrations. Research is needed to find out whether there is significant effect of waste heat recovery on dioxin emissions from cement kilns (Lee, C-W., 2006. Personal communication with Chun-Wai Lee, U.S. Environmental Protection Agency, Office of Research and Development, National Risk Management Research Laboratory. Gullett, B., 2006. Personal communication with Brian Gullett, U.S. Environmental Protection Agency, Office of Research and Development, National Risk Management Research Laboratory.).

[2] Global Environment Institute (GEI). 2005. Financing of Energy Efficiency Improvement for Cement Industry in China. January.

[3] Cui, Y., 2004 and 2006. Personal communication with Prof. Cui Yuansheng, VP of the Institute of Technical Information for Building Materials Industry of China (ITIBMIC).

[4] Pan, Jiong. 2005. The technique and application of power generation by waste heat in moderate and low temperature in cement plant (in Chinese). www.chinacement.org

[5] Institute of Technical Information for Building Materials Industry (ITIBMIC). 2004. Final Report on Cement Survey. Prepared for the United Nations Industrial Development Organization (UNIDO) for the Contract Entitled Cement Sub-sector Survey for the Project Energy Conservation and GHG Emissions Reduction in Chinese TVEs-Phase II. Contract no. 03/032/ML, P.O. No. 16000393, September 9.

- Domestic technology could produce 35kWh/t of clinker while Japanese technology now produces 45 kWh/t of clinker. German technology is even better but no data is available.[7]
- Running time and required labor are approximately the same for foreign and domestic equipment.

Block Diagram or Photo:

1.5 MW Ormat® Energy Converter at the Lengfurt Cement, Germany, image taken from http://www.ormat.com/FileServer/70b593358e2da845c512c50dc0c47613.pdf

Case Studies:

- The Anhui Ningguo cement plant, with funding from Japan[8], installed a power generation system on a 4000 tonne per day kiln cement production line and found electricity generated reached 39 kWh per tonne of clinker since operation began in 1998.[9]
- At China United Cement Company, two 6000 kW systems were installed for RMB 101.8 million, RMB 36 million of private capital and RMB 64 million of bank loans, equaling about RMB 8500 per kW.[10] The electricity being generated is 79.8 kWh/t clinker.
- Beijing Cement Ltd. also installed waste heat recovery equipment on its 2400 tpd and 3200 tpd kilns.[11] Total capacity is now 7.5 MW and the total investment was RMB

---

[6] Institute of Technical Information for Building Materials Industry (ITIBMIC). 2004. Final Report on Cement Survey. Prepared for the United Nations Industrial Development Organization (UNIDO) for the Contract Entitled Cement Sub-sector Survey for the Project Energy Conservation and GHG Emissions Reduction in Chinese TVEs-Phase II. Contract no. 03/032/ML, P.O. No. 16000393, September 9.

[7] Cui, Y., 2004 and 2006. Personal communication with Prof. Cui Yuansheng, VP of the Institute of Technical Information for Building Materials Industry of China (ITIBMIC).

[8] Global Environment Institute (GEI). 2005. Financing of Energy Efficiency Improvement for Cement Industry in China. January.

[9] Anhui Ningguo Cement Plant, 2002. The Report on Power Generation by Waste Heat of the Kiln in Ningguo Cements Plant. http://green.cei.gov.cn/doc/LY31/200204192475.htm (in Chinese).

[10] China National Building Material Group Corporation (CNBM), 2005. Zhonglian Julong Huaihai Cement Co., Ltd.: Low Temperature Residual Heat Power Generation Project. Presentation by CNBM, October, 2005.

[11] Beijing Energy Investment Company (BEIC), 2006. Electrical Power Station with Pure Low Temperature & Waste Heat in Beijing Cement Ltd.; Geothermal Heating Supply in BioYuan Uptown. Presentation on CDM proposed projects by BEIC.

47.43 million, equaling about 6,300 RMB per kW. Of this, 70% was provided by the Beijing Energy Investment Company.

- In another demonstration project summarized elsewhere,[12] the waste heat from two clinker kilns of Taishan Cement Ltd is to be used. The capacity of the two kilns is 5000 tonnes per day and 2500 tonnes per day. Operation was to begin on 1st Oct 2005; equipment has already been installed but is still under adjustment. Maximum capacity is designed at 13.2 MW and annual output of 95 GWh. Of this, 90.8 GWh would be supplied to cement production, accounting for more than 30% of the energy needs of cement production.[13]
- In May 2002, the Tianjin Cement Industry Design and Research Institute in cooperation with the Shanghai Wanan Enterprise Corporation began renovations on a 1350 tonne four-stage cyclone preheater kiln to generate low-temperature waste heat electricity.[14] They installed domestic low temperature waste heat recovery technology, and the facility now generates over 1.8 MW of electricity, operating 7000 hours per year. Including the 10% electricity required to operate the system, the facility generates an additional 11.34 GWh annually. With an electricity price of 0.50 RMB/kWh, the Tianjin Cement plant found savings of 11 to 14 RMB per tonne of clinker. The operating cost is about 0.06 RMB/kWh and the payback period about 3 years.
- Low-temperature waste heat recovery has been implemented at other plants, as well, including the 4000 tonne/day precalciner kiln at the Ningguo Cement Factory of the Conch Group and the Liuzhou Cement Factory.[15]

[12] Global Environment Institute (GEI). 2005. Financing of Energy Efficiency Improvement for Cement Industry in China. January.

[13] Guo, Jie. 2004. The contract of flash distillation waste heat power generation demonstration project of Taishan Cement signed (in Chinese). Available at http://cncement.com

[14] Institute of Technical Information for Building Materials Industry (ITIBMIC). 2004. Final Report on Cement Survey. Prepared for the United Nations Industrial Development Organization (UNIDO) for the Contract Entitled Cement Sub-sector Survey for the Project Energy Conservation and GHG Emissions Reduction in Chinese TVEs-Phase II. Contract no. 03/032/ML, P.O. No. 16000393, September 9.

[15] Institute of Technical Information for Building Materials Industry (ITIBMIC). 2004. Final Report on Cement Survey. Prepared for the United Nations Industrial Development Organization (UNIDO) for the Contract Entitled Cement Sub-sector Survey for the Project Energy Conservation and GHG Emissions Reduction in Chinese TVEs-Phase II. Contract no. 03/032/ML, P.O. No. 16000393, September 9.

High Temperature Heat Recovery for Power Generation for Clinker Making in Rotary Kilns

Description: Waste gas discharged from the kiln exit gases, the clinker cooler system, and the kiln pre-heater system all contain useful energy that can be converted into power.

Energy/Environment/Cost/Other Benefits:

- In the U.S., only in a long-dry kiln is the temperature of the exhaust gas sufficiently high to cost-effectively recover the heat through power generation.[1]
- Cogeneration systems can either be direct gas turbines that utilize the waste heat (top cycle), or the installation of a waste heat boiler system that runs a steam turbine system (bottom cycle).
- This measure focuses on the steam turbine system since these systems have been installed in many plants worldwide and have proven to be economic.[2,3,4]
- Heat recovery has limited application for plants with in-line raw mills, as the heat in the kiln exhaust is used for raw material drying.
- While electrical efficiencies are still relatively low (18%), based on several case studies power generation may vary between 11 and 25 kWh/t clinker.[5,6,7]
- Electricity savings of 22 kWh/t clinker are assumed.
- Installation costs for such a system are estimated to be at $2.2 to 4.4/annual tonne clinker capacity with operating costs of $0.22 to 0.33/t clinker.[8]
- In 1999, four U.S. cement plants cogenerated 486 million kWh.[9]
- In China, most high temperature waste heat is recycled to the preheated and precalciner.

---

[1] Technically, organic rankine cycles or Kalina cycles (using a mixture of water and ammonia) can be used to recover low-temperature waste heat for power production, but this is currently not economically attractive, except for locations with high power costs. In China, however, low temperature heat is being recovered; see previous measure for details.

[2] Steinbliss, E. 1990. Traditional and Advanced Concepts of Waste Heat Recovery in Cement Plants Energy Efficiency in the Cement Industry (Ed. J. Sirchis), London, England: Elsevier Applied Science

[3] Jaccard, M.K. & Associates and Willis Energy Services Ltd. 1996. Industrial Energy End-Use Analysis and Conservation Potential in Six Major Industries in Canada. Report prepared for Natural Resources Canada, Ottawa, Canada.

[4] Neto, M. 1990. Waste Gas Heat Recovery in Cement Plants Energy Efficiency in the Cement Industry (Ed. J. Sirchis), London, England: Elsevier Applied Science.

[5] Steinbliss, E. 1990. Traditional and Advanced Concepts of Waste Heat Recovery in Cement Plants Energy Efficiency in the Cement Industry (Ed. J. Sirchis), London, England: Elsevier Applied Science.

[6] Scheuer, A. and Sprung, S., 1990. Energy Outlook in West Germany's Cement Industry. Energy Efficiency in the Cement Industry (Ed. J. Sirchis), London, England: Elsevier Applied Science.

[7] Neto, M. 1990. Waste Gas Heat Recovery in Cement Plants Energy Efficiency in the Cement Industry (Ed. J. Sirchis), London, England: Elsevier Applied Science.

[8] Jaccard, M.K. & Associates and Willis Energy Services Ltd. 1996. Industrial Energy End-Use Analysis and Conservation Potential in Six Major Industries in Canada. Report prepared for Natural Resources Canada, Ottawa, Canada.

[9] United States Geological Survey, 2001. Minerals Yearbook, Washington, D.C., USGS. Available at http://minerals.er.usgs.gov/minerals/.

Block Diagram or Photo:

Waste heat recovery at cement plant, image taken from
http://www.takuma.co.jp/english/product/boiler/hainetu/cement.html

Low Pressure Drop Cyclones for Suspension Preheaters for Clinker Making in Rotary Kilns

Description: Cyclones are a basic component of plants with pre-heating systems. The installation of newer cyclones in a plant with lower pressure losses will reduce the power consumption of the kiln exhaust gas fan system.

Energy/Environment/Cost/Other Benefits:

- Depending on the efficiency of the fan, 0.66 to 0.77 kWh/t clinker can be saved for each 50 mm water column (W.C.) the pressure loss is reduced. For most kilns that are older, this amounts to savings of 0.66 to 1.1 kWh/t clinker.[1]
- Installation of the cyclones can be expensive, since it may often entail the rebuilding or the modification of the preheater tower, and the costs are very site specific.
- New cyclone systems may increase overall dust loading and increase dust carryover from the preheater tower. However, if an inline raw mill follows it, the dust carryover problem becomes less of an issue.
- A cost of $3/annual tonne clinker is assumed for a low-pressure drop cyclone system.
- The best technology available in China is imported from Austria (see below).[2]

Block Diagram or Photo:

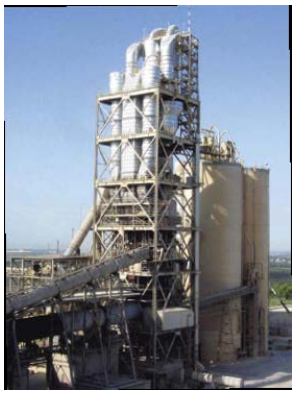

New preheater including cyclones in Alamo Cement Plant, San Antonio, Texas (U.S.), image taken from http://www.buzziunicem.it/contentsmulti/instance1/files/document/220ALAMOP34.pdf

Case Studies:

- Fujimoto (1994) discussed a Lehigh Cement plant retrofit in which low-pressure drop cyclones were installed in their Mason City, Iowa plant and saved 4.4 kWh/t clinker.[3]

[1] Birch, E. 1990. Energy Savings in Cement Kiln Systems Energy Efficiency in the Cement Industry (Ed. J. Sirchis), London, England: Elsevier Applied Science: 118-128.
[2] Cui, Y., 2004 and 2006. Personal communication with Prof. Cui Yuansheng, VP of the Institute of Technical Information for Building Materials Industry of China (ITIBMIC).
[3] Birch, E. 1990. Energy Savings in Cement Kiln Systems Energy Efficiency in the Cement Industry (Ed. J. Sirchis), London, England: Elsevier Applied Science: 118-128.

Efficient Kiln Drives for Clinker Making in Rotary Kilns

Description: A substantial amount of power is used to rotate the kiln. The highest efficiencies are achieved using a single pinion drive with an air clutch and a synchronous motor.[1]

Energy/Environment/Cost/Other Benefits:

- The system would reduce power use for kiln drives by a few percent, or roughly 0.55 kWh/t clinker at slightly higher capital costs (+6%).
- More recently, the use of alternate current (AC) motors is advocated to replace the traditionally used direct current (DC) drive. The AC motor system may result in slightly higher efficiencies (0.5 – 1% reduction in electricity use of the kiln drive) and has lower investment costs.[2]
- Replacing older motors with high-efficiency ones may reduce power costs by 2 to 8%.

Block Diagram or Photo:

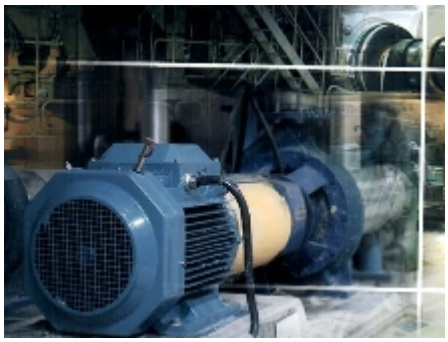

High efficiency motor, image taken from http://news.thomasnet.com/fullstory/4650

[1] Regitz, John. 1996. Evaluation of Mill Drive Options IEEE Transactions on Industry Applications 3 32: 653.

[2] Holland, M. 2001. AC DC Kilns, Proc. 2001 IEEE-IAS/PCA Cement Industry Technical Conference: 75-84.

Replacing Vertical Shaft Kilns with New Suspension Preheater/Precalciner Kilns for Clinker Making in Vertical Shaft Kilns

Description: The new suspension preheater (NSP) technique is being developed for 1000 t/day, 2000 t/day and 4000 t/day.[1] NSP should be used for medium- or large-scale cement plants that are being either enlarged or rebuilt. For the small cement plants, earthen vertical kiln (and hollow rotary kiln with dry method) should be gradually abandoned. Further description of these kilns is made above.

Energy/Environment/Cost/Other Benefits:

- Some "key" Chinese plants[2] use 5.4 GJ/t clinker (184 kgce/t clinker), while advanced precalciner kilns use about 3 GJ/t clinker (102 kgce/t clinker); a savings of 2.4 G/t clinker (82 kgce/t clinker).[3]
- By the end of 2004, China put into service 140 new suspension preheater/precalciner (NSP) and suspension preheater (SP) kilns; of those, 50 were new in 2004.[4]
- For more information on this technology, also see measures in Energy Efficiency Opportunities for Clinker Production – Rotary Kilns Section.

Block Diagram or Photo:

Sample images from Chinese cement plants having rotary kilns with preheaters and precalciners.

Case Studies:

- The Liulihe Cement Factory installed a precalciner kiln with a 5-stage preheater and a preburning furnace and found fuel consumption to be 3.011 G/t (246.6 kgce/t).[5]

---

[1] Global Environment Institute (GEI). 2005. Financing of Energy Efficiency Improvement for Cement Industry in China. January.

[2] "Key" Chinese plants generally refer to large, centrally administered state-owned enterprises (Sinton, J.E., 1996. Energy Efficiency in Chinese Industry: Positive and Negative Influences of Economic System Reforms. PhD Thesis, University of California- Berkeley).

[3] Liu, F., M. Ross and S. Wang. 1995. Energy Efficiency of China's Cement Industry. Energy 20 (7): 669-681.

[4] Cui, Y., 2004 and 2006. Personal communication with Prof. Cui Yuansheng, VP of the Institute of Technical Information for Building Materials Industry of China (ITIBMIC).

[5] Institute of Technical Information for Building Materials Industry (ITIBMIC). 2004. Final Report on Cement Survey. Prepared for the United Nations Industrial Development Organization (UNIDO) for the

Contract Entitled Cement Sub-sector Survey for the Project Energy Conservation and GHG Emissions Reduction in Chinese TVEs-Phase II. Contract no. 03/032/ML, P.O. No. 16000393, September 9.

Kiln Combustion System Improvements for Clinker Making in Vertical Shaft Kilns

Description: Fuel combustion systems in kilns can be contributors to kiln inefficiencies, often resulting in higher CO formation. Inefficiencies are caused by incomplete combustion of fuel, combustion with excess or inadequate air, uneven air distribution, and oversupply of coal.[1] Inadequate blower capacity and leakage can result in insufficient air supply. Improvement of air distribution requires better quality raw material pellets and precise kiln operation. Sophisticated VSKs are mechanized with automatic feeding and discharging equipment, while older VSKs are still operated manually.[2] Oversupply of coal often results from coal powder that has been overground, supplying high fuel density. At low temperatures and insufficient oxygen, overground coal reacts with CO_2 and generates CO. More information on automation of the kiln, feed, and blending can be found in the measure "Energy Management and Process Control Systems", above.

In China, domestic technologies are being used for medium and small cement plants; for larger plants, many are using imported technologies.[3]

Energy/Environment/Cost/Other Benefits:

- Energy savings for rotary kilns are about 2 to 10%. In BEST Cement, we assume these savings apply to vertical shaft kilns as well.

Block Diagram or Photo:

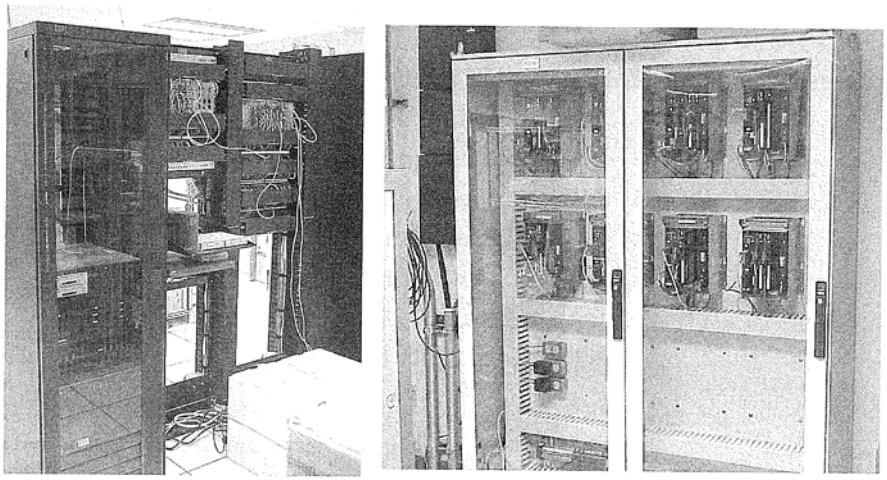

Various computer controlled systems improve operation of kiln. Images taken from Bhatty, J. I., F. M. Miller and S. H. Kosmatka (eds.) 2004. Innovations in Portland Cement Manufacturing. Portland Cement Association.

[1] Venkateswaran, S.R. and H.E. Lowitt. 1988. The U.S. Cement Industry, An Energy Perspective, U.S. Department of Energy, Washington D.C., USA; Liu, F., M. Ross and S. Wang. 1995. Energy Efficiency of China's Cement Industry. Energy 20 (7): 669-681.

[2] Liu, F., M. Ross and S. Wang. 1995. Energy Efficiency of China's Cement Industry. Energy 20 (7): 669-681.

[3] Cui, Y., 2006. Personal communication with Prof. Cui Yuansheng, VP of the Institute of Technical Information for Building Materials Industry of China (ITIBMIC).

Process Control and Management in Grinding Mills for Finish Grinding

Description: Control systems for grinding operations are developed using the same approaches as for kilns (see kiln energy efficiency measures for more information). The systems control the flow in the mill and classifiers, attaining a stable and high quality product. Several systems are marketed by a number of manufacturers. Expert systems have been commercially available since the early 1990's.

Energy/Environment/Cost/Other Benefits:

- Energy savings of 3 to 3.5 kWh/t (reduction in power consumption by 2%-3%)
- Payback periods are typically between 6 months and 2 years.[1,2]
- Reduced process and quality variability
- Improved throughput/production increases

Block Diagram or Photo:

Source: Spear, M., 2004. "Cementing Success," Process Engineering, pp 27-28.

Case Studies:

- Use of Rockwell Automation's Mill Optimizer for optimizing closed circuit raw meal and finish grinding circuits in a major cement company's Asia Pacific plant resulting in reduction of specific power consumption by 3% through improved throughput and closer control of fan/motor loads as well as improved product quality control.[3]
- At the Roanoke Cement Company in Virginia, the Pavilion advanced process control system was install on two finish mills, resulting in a 3 to 3.5 decrease in kWh/t energy use and a production increase of 3 to 4 tons per hour.[4]

---

[1] Martin, G. and S. McGarel. 2001a. Automation Using Model Predictive Control in the Cement Industry. Pavillion Technologies, Inc., Austin, TX (based on a paper published in International Cement Review, February: 66-67). Available at: http://www.pavtech.com/

[2] Albert, O., 1993. MCE – An Expert System for Mill Plant Control, Krupp Polysius, Germany

[3] Rockwell Automation, 2004. *Online Control at Major Cement Company in Asia Pacific Maximizes Throughput, Lowers Product Quality Variation to 30% and Reduces Specific Energy Consumption by 3%.* Pub No ELPPVP-AP-009A-EN-D

[4] Pavilion Technologies. "Easy as APC".

- Use of a Pavilion advanced process control system at the Cemex Fairborn plant resulted in 40% process variability reduction, 30% quality variability reduction, 2% production increase, 2% energy consumption decrease.[5]
- At the Golden Bay Cement plant in New Zealand, a Pavilion advanced process control system for the finish mill led to a 3% increase in throughput, 50% reduction in residue variation, and a return on the investment of less than one year.[6]
- The Karlstadt plant of Schwenk KG (Germany) implemented an expert system in a finishing mill in 1992, increasing mill throughput and saving energy. The payback is estimated between 1.5 and 2 years in Germany.[7]
- Magotteaux (Belgium) has marketed a control system for mills since 1998 and has sold six units to plants in Germany (Rohrdorfer Zement), Greece (Heracles General Cement), South Africa (PPC Group) and the United Kingdom (UK) (Rugby Group).
- Experience with a cement mill at the South Ferriby plant of the Rugby Group in the UK showed increased production (+3.3%) and power savings equal to 3%, while the standard deviation in fineness went down as well.[8]
- Krupp Polysius markets the PolExpert system and reports energy savings between 2.5 and 10% (typically 8%), with increased product quality (lower deviation) and production increases of 2.5 –10%, after installing control systems in finishing mills. [9]
- Similar results have been achieved with model predictive control (using neural networks) for a cement ball mill at a South-African cement plant.[10]
- Pavilion Technologies (US) has developed a new control system using neural networks. Pavilion Technologies reports a 4-6% throughput increase (and corresponding reduction in specific power consumption) for installing a model predictive control system in finish ball mill.[11]

---

[5] Lauer, D, Becerra, K., Deng, D.J, 2005. "Maximizing Mill Throughput," *International Cement Review*.
[6] Spear, M., 2004. "Cementing Success," *Process Engineering*, pp 27-28.
[7] Albert, O., 1993. MCE – An Expert System for Mill Plant Control, Krupp Polysius, Germany.
[8] Van den Broeck, M., 1999. GO Control Goes 'Multi-Circuit' *International Cement Journal* 1, pp.35-37.
[9] Goebel, Alexander, 2001. Personal communication with Alexander Goebel, Krupp Polysius, Beckum, Germany, December 20th, 2001
[10] Martin, G. and S. McGarel. 2001a. Automation Using Model Predictive Control in the Cement Industry. Pavillion Technologies, Inc., Austin, TX (based on a paper published in International Cement Review, February: 66-67). Available at: http://www.pavtech.com/
[11] Martin, G., S. McGarel, T. Evans, and G. Eklund. 2001. Reduce Specific Energy Requirements while Optimizing NOx Emissions Decisions in Cement with Model Predictive Control, Personal Communication from Pavilion Technologies, Inc., Austin, TX, December 3.

Vertical Roller Mill for Finish Grinding

Description: Roller mills employ a mix of compression and shearing, using 2-4 grinding rollers carried on hinged arms riding on a horizontal grinding table. [1] The raw material is ground on a surface by rollers that are pressed down using spring or hydraulic pressure, with hot gas used for drying during the grinding process.[2]

Energy/Environment/Cost/Other Benefits:

- Energy use of between 18.3 and 20.3 kWh/t clinker (compared to 30-42 kWh/t clinker for a ball mill depending on the fineness of the cement.)
- Can accept raw materials with up to 20% moisture content.
- Less variability in product consistency.

Block Diagram or Photo:

Source: http://www.cement.org/manufacture/man_vrm.asp

Case Studies:

- A vertical roller mill in the U.S. uses about 18.3 kWh/t clinker compared to 35.2 kWh/t clinker for a ball mill, saving 16.9 kWh/t clinker.[3]
- A vertical roller mill with four grinding rollers and a high-efficiency separator at the Bosenberg cement plant in Germany has a specific power consumption of 11.45 kWh/t raw meal (20.3 kWh/t clinker).[4]
- A ball mill was replaced with a vertical mill for finish grinding at the Ramla Cement Plant in Israel. They found savings of 10 kWh/t cement and a lifetime for the equipment of 20 years[5].

---

[1] Cembureau, 1997b. Best Available Techniques for the Cement Industry, Brussels: Cembureau; Alsop, P.A. and J.W. Post. 1995. The Cement Plant Operations Handbook, (First edition), Tradeship Publications Ltd., Dorking, UK

[2] Bhatty, J. I., F. M. Miller and S. H. Kosmatka (eds.), 2004. *Innovations in Portland Cement Manufacturing*. Skokie, IL: PCA.

[3] Simmons, M., Gorby, L., and Terembula, J., 2005. "Operational Experience from the United States' First Vertical Roller Mill for Cement Grinding," IEEE.

[4] Schneider, U., "From ordering to operation of the first quadropol roller mill at the Bosenberg Cement Works," *ZKG International*, No.8, 1999: 460-466.

[5] The United Nations Framework Convention on Climate Change (2008) CDM project documents available at: http://cdm.unfccc.int/Projects/DB/DNV-CUK1160716504.46/view

High Pressure (Hydraulic) Roller Press for Finish Grinding

Description:

A high pressure roller press, in which two rollers pressurize the material up to 3,500 bar, can replace ball mills for finish grinding, improving the grinding efficiency dramatically.[1].

Energy/Environment/Cost/Other Benefits:

- A roller press with a V-separator uses 15.6 kWh/t clinker for finish grinding.[2]
- Capital cost estimates for installing a new roller press vary widely in the literature, ranging from low estimates of $2.5/annual tonne cement capacity[3] or $3.6/annual tonne cement capacity[4] to high estimates of $8/annual tonne cement capacity.[5]
- The capital costs of roller press systems are lower than those for other systems[6] or at least comparable.[7]
- Can achieve an increase in throughput of about 20% and energy savings of about 7 to 15%.[8]

Block Diagram or Photo:

The Bateman-KHD Roller Press.
Source: http://www.batemanengineering.com/Globe46/BATEMAN_gets_KHD_roller-press_agency.htm

---

[1] Seebach, H.M. von, E. Neumann and L. Lohnherr, 1996. State-of-the-Art of Energy-Efficient Grinding Systems *ZKG International* 2 **49** pp.61-67.
[2] Bhatty, J. I., F. M. Miller and S. H. Kosmatka (eds.), 2004. *Innovations in Portland Cement Manufacturing*. Skokie, IL: PCA.
[3] Holderbank Consulting, 1993. Present and Future Energy Use of Energy in the Cement and Concrete Industries in Canada, CANMET, Ottawa, Ontario, Canada.
[4] Kreisberg, A., 1993. Selection and Application of Roller Press for Raw Meal Preparation at Alpena, *Proc. KHD Symposium '92, Volume 1, Modern Roller Press Technology*, KHD Humboldt Wedag, Cologne, Germany.
[5] COWIconsult, March Consulting Group and MAIN. 1993. Energy Technology in the Cement Industrial Sector, Report prepared for CEC - DG-XVII, Brussels, April 1992.
[6] Kreisberg, A., 1993. Selection and Application of Roller Press for Raw Meal Preparation at Alpena, *Proc. KHD Symposium '92, Volume 1, Modern Roller Press Technology*, KHD Humboldt Wedag, Cologne, Germany
[7] Patzelt, N., 1993. Finish Grinding of Slag, *World Cement* 10 **24** pp.51-58
[8] Bhatty, J. I., F. M. Miller and S. H. Kosmatka (eds.), 2004. *Innovations in Portland Cement Manufacturing*. Skokie, IL: PCA.

Case Studies:

- Installation of a high pressure roller press at Coplay Cement's Nazareth I Plant increased production by 70 short tons per hour. The high pressure roller press resulted in energy savings of 30% or 15 kWh per short ton, reducing total plant power costs, resulting in savings of over $500,000 per year.[9]

[9] Conroy, G.H., "Experience of the High Pressure Roller Press Installation at CoplyCement's Nazareth I Plant," *Cement Industry Technical Conference*, 1989. XXXI.

Horizontal Roller Mill for Finish Grinding

Description:

In the Horomill, first demonstrated in Italy in 1993, [1] a horizontal roller within a cylinder is driven. The centrifugal forces resulting from the movement of the cylinder cause a uniformly distributed layer to be carried on the inside of the cylinder. The layer passes the roller (with a pressure of 700-1000 bar).[2] The finished product is collected in a dust filter.

Energy/Environment/Cost/Other Benefits:

- Compared with ball mills, Horomills offer energy savings of 35% to 40% for cement and up to 50% for raw materials.[3]
- Vendor information provides the following energy use values:[4]
  - Ordinary Portland cement: ball mill 30 kWh/t, Horomill 19.5 kWh/t
  - Pozzolanic or limestone cement: ball mill 30 kWh/t, Horomill 16.5 kWh/t
  - Cement raw meal: ball mill 14 kWh/t, Horomill 7 kWh/t
- The Horomill is a compact mill that can produce a finished product in one step and hence has relatively low capital costs.
- Some new mill concepts may lead to a reduction in operation costs of as much as 30-40%.[5]

Block Diagram or Photo:

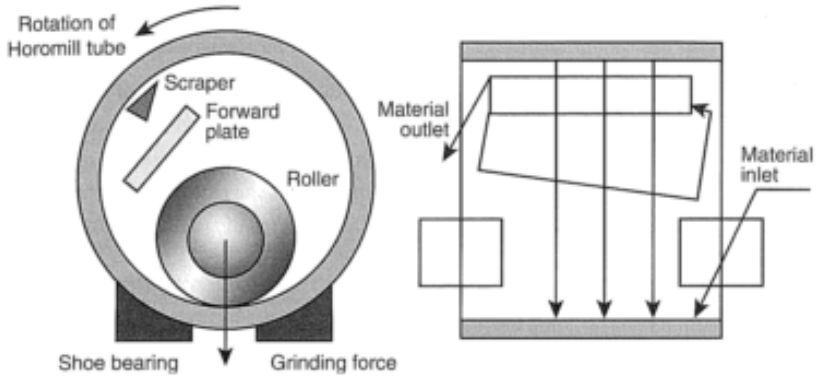

Images taken from Bhatty, J. I., F. M. Miller and S. H. Kosmatka (eds.) 2004. *Innovations in Portland Cement Manufacturing*. Skokie, IL: Portland Cement Association.

---

[1] Buzzi, S. 1997. Die Horomill® - Eine Neue Mühle für die Feinzerkleinerung, ZKG International 3 50: 127-138.

[2] Marchal, G. 1997. Industrial Experience with Clinker Grinding in the Horomill *Proc.1997 IEEE/PCA Cement Industry Technical Conference XXXIX Conference Record*, Institute of Electrical and Electronics Engineers: New Jersey.

[3] Bhatty, J. I., F. M. Miller and S. H. Kosmatka (eds.), 2004. *Innovations in Portland Cement Manufacturing*. Skokie, IL: PCA.

[4] fcb.ciment. *The New Generation of Horomill Gets the Benefit of Mechanical Optimization*. http://www.fcb-ciment.com/en/cement/horomill_0.asp

[5] Sutoh, K., M. Murata, S. Hashimoto, I. Hashimoto, S. Sawamura and H. Ueda, 1992. Gegenwärtiger Stand der Vormahlung von Klinker und Zement-rohmaterialien nach dem CKP-System, *ZKG* 1 **45** pp.21-25

Case Studies:

- After the first demonstration of the Horomill in Italy, this concept is now also applied in plants in Mexico,[6] Germany, Czech Republic and Turkey.[7]
- Cement grinding using a Horomill in a Turkish cement plant consumed 20.07 kWh/t.[8]

[6] Buzzi, S. 1997. Die Horomill® - Eine Neue Mühle für die Feinzerkleinerung, ZKG International 3 50: 127-138.

[7] Duplouy, A. and J. Trautwein. 1997. Umbau und Optimierung der Drehofenanlagen im Werk Karsdorf der Lafarge Zement Gmbh. ZKG International 4 50: 190-197.

[8] Bhatty, J. I., F. M. Miller and S. H. Kosmatka (eds.), 2004. *Innovations in Portland Cement Manufacturing*. Skokie, IL: PCA.

High Efficiency Classifiers for Finish Grinding

Description: A recent development in efficient grinding technologies is the use of high-efficiency classifiers or separators. Classifiers separate the finely ground particles from the coarse particles. The large particles are then recycled back to the mill. Standard classifiers may have a low separation efficiency, which leads to the recycling of fine particles, resulting in extra power use in the grinding mill. In high-efficiency classifiers, the material is more cleanly separated, thus reducing over-grinding. High efficiency classifiers or separators have had the greatest impact on improved product quality and reducing electricity consumption. Newer designs of high-efficiency separators aim to improve the separation efficiency further and reduce the required volume of air (hence reducing power use), while optimizing the design.

Energy/Environment/Cost/Other Benefits:

- A study of the use of high efficiency classifiers in Great Britain found a reduction in electricity use of 7 kWh/t cement after the installation of the classifiers in their finishing mills and a 25% production increase.[1]
- One study estimates a reduction of 8% of electricity use (6 kWh/t cement)[2] while other studies estimate 1.9-2.5 kWh/t cement.[3]
- Actual savings will vary by plant and cement type and fineness required.

Block Diagram or Photo:

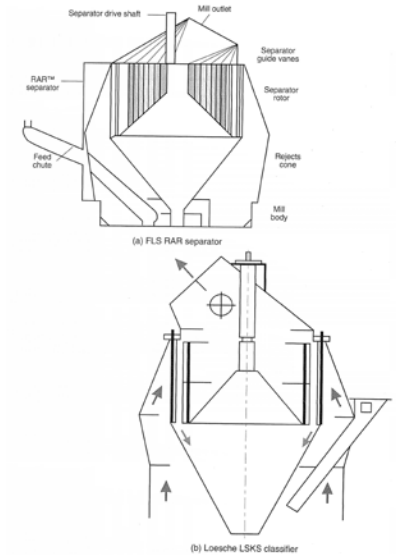

Examples of high efficiency classifiers in vertical roller mills from Bhatty, J. I., F. M. Miller and S. H. Kosmatka (eds.) 2004. Innovations in Portland Cement Manufacturing. Portland Cement Association.

---

[1] Parkes, F.F., 1990. Energy Saving by Utilisation of High Efficiency Classifier for Grinding and Cooling of Cement on Two Mills at Castle Cement (Ribblesdale) Limited, Clitheroe, Lancashire, UK, *Energy Efficiency in the Cement Industry* (Ed. J. Sirchis), London, England: Elsevier Applied Science.

[2] Holderbank Consulting. (1993). "Present and Future Energy Use of Energy in the Cement and Concrete Industries in Canada," CANMET, Ottawa, Ontario, Canada.

[3] Salzborn, D. and A. Chin-Fatt, 1993. Operational Results of a Vertical Roller Mill Modified with a High Efficiency Classifier *Proc. 35th IEEE Cement Industry Technical Conference*, Toronto, Ontario, Canada, May 1993; Süssegger, A., 1993. Separator-Report '92 Proc. KHD Symposium '92, Volume 1 Modern Roller Press Technology, KHD Humboldt Wedag, Cologne, Germany.

Case Studies:

- The electricity savings from installing a new high-efficiency classifier at a cement plant in Origny-Rochefort (France) varied between 0 and 6 kWh/t, [4] and investment costs were $2/annual tonne finished material.[5]
- The Satna Cement Works of Birla Corporation Limited in India optimized the design of their classifier and found energy savings of 1.62 kWh/t clinker at a cost of 7.8 INR/t clinker (1.3 RMB/t clinker)[6].

[4] Van den Broeck, M., 1998. A SD100 Sturtevant High-Efficiency Classifier for Origny-Rochefort, *International Cement Journal* 2 pp.39-45.

[5] Holderbank Consulting, 1993. Present and Future Energy Use of Energy in the Cement and Concrete Industries in Canada, CANMET, Ottawa, Ontario, Canada.

[6] The United Nations Framework Convention on Climate Change (2008) CDM project documents available at: http://cdm.unfccc.int/Projects/DB/SGS-UKL1175367790.14/view

Improved grinding media (for ball mills)

Description: Improved wear resistant materials can be installed for grinding media, especially in ball mills. Grinding media are usually selected according to the wear characteristics of the material. Increases in the ball charge distribution and surface hardness of grinding media and wear resistant mill linings have shown a potential for reducing wear as well as energy consumption[1]. Improved balls and liners made of high chromium steel is one such material but other materials are also possible. Other improvements include the use of improved liner designs, such as grooved classifying liners.

Energy/Environment/Cost/Other Benefits:

- Improved grinding media have the potential to reduce grinding energy use by 5-10% in some mills, which is equivalent to estimated savings of 3-5 kWh/t cement[2]

Block Diagram or Photo:

Steel grinding media interspersed with clinker in a cement mill, image courtesy Castle Cement, taken from http://www.understanding-cement.com/mill.html

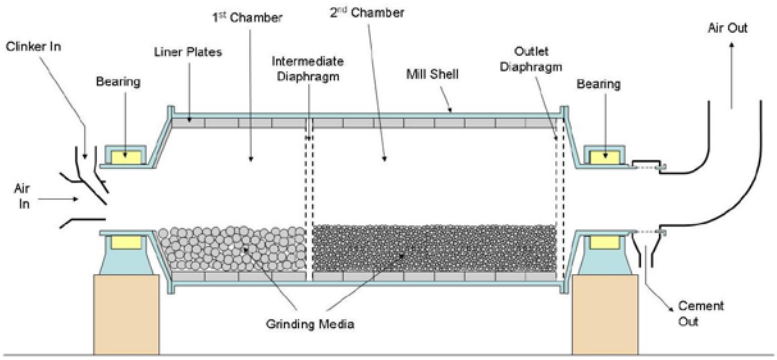

Ball mill layout, image taken from http://en.wikipedia.org/wiki/Cement_mill

[1] Venkateswaran, S.R. and H.E. Lowitt. (1988). "The U.S. Cement Industry, An Energy Perspective", U.S. Department of Energy, Washington D.C., USA.
[2] Venkateswaran, S.R. and H.E. Lowitt. (1988). "The U.S. Cement Industry, An Energy Perspective", U.S. Department of Energy, Washington D.C., USA.

High-Efficiency Motors and Drives

Description: Motors and drives are used throughout the cement plant to move fans (preheater, cooler, alkali bypass), to rotate the kiln, to transport materials and, most importantly, for grinding. In a typical cement plant, 500-700 electric motors may be used, varying from a few kW to MW-size.[1] Power use in the kiln (excluding grinding) is roughly estimated to be 40-50 kWh/tonne clinker .[2] Variable speed drives, improved control strategies and high-efficiency motors can help to reduce power use in cement kilns. If the replacement does not influence the process operation, motors may be replaced at any time. However, motors are often rewired rather than being replaced by new motors.

Energy/Environment/Cost/Other Benefits:

- Power savings may vary considerably on a plant-by-plant basis, ranging from 3 to 8%.[3, 4]
- Based on an analysis of motors in the U.S. Department of Energy's MotorMaster+ software, and a breakdown of motors in a 5,000 tpd cement plant given in Bösche (1993), it is assumed that high-efficiency motors replace existing motors in all plant fan systems with an average cost of $0.22/annual tonne cement capacity.[5]

Block Diagram or Photo:

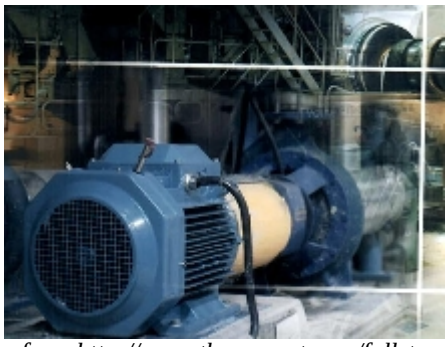

High efficiency motor, image taken from http://news.thomasnet.com/fullstory/4650

[1] Vleuten, F.P. van der. 1994. Cement in Development: Energy and Environment Netherlands Energy Research Foundation, Petten, The Netherlands.
[2] Heijningen, R.J.J., J.F.M. Castro, and E. Worrell (eds.), 1992. Energiekentallen in Relatie tot Preventie en Hergebruik van Afvalstromen, NOVEM/RIVM, Utrecht/Bilthoven, The Netherlands.
[3] Fujimoto, S., 1994. Modern Technology Impact on Power Usage in Cement Plants, IEEE Transactions on Industry Applications, Vol. 30, No. 3, June.
[4] Vleuten, F.P. van der. 1994. Cement in Development: Energy and Environment Netherlands Energy Research Foundation, Petten, The Netherlands.
[5] Bösche, A., 1993. "Variable Speed Drives in Cement Plants," *World Cement* 6 **24** pp.2-6 (1993).

Adjustable or Variable Speed Drives

Description: Drives are the largest power consumers in cement making. The energy efficiency of a drive system can be improved by reducing the energy losses or by increasing the efficiency of the motor. Most motors are fixed speed AC models. However, motor systems are often operated at partial or variable load.[1] Also, in cement plants large variations in load occur.[2] Within a plant, adjustable speed drives (ASDs) can mainly be applied for fans in the kiln, cooler, preheater, separator and mills, and for various drives.

Energy/Environment/Cost/Other Benefits:

- Decreasing throttling can reduce energy losses in the system and coupling losses through the installation of ASD.
- ASD equipment is used more and more in cement plants,[3,4] but the application may vary widely, depending on electricity costs.
- ASDs for clinker cooler fans have a low payback, even when energy savings are the only reason for installing ASDs.[5]
- An overview of savings achieved with ASD in a wide array of applications is provided elsewhere.[6] The savings depend on the flow pattern and loads. The savings can be significant[7] but strongly depend on the application and flow pattern of the system on which the ASD is installed, varying between 7 and 60%. They estimate that the potential savings are 15% for 44% of the installed power, or roughly equivalent to 8 kWh/t cement.
- The specific costs depend strongly on the size of the system. For systems over 300 kW the costs are estimated to be 70 ECU/kW (75 US$/kW) or less and for the range of 30-300 kW at 115-130 ECU/kW (120-140 US$/kW). [8] Using these cost estimates, the specific costs for a modern cement plant, as studied by Bösche (1993), can be estimated to be roughly $0.9 to 1.0/annual tonne cement capacity.[9] Other estimates vary between $0.4 and $3/annual tonne cement.[10,11]

---

[1] Nadel, S., M. Shepard, S. Greenberg, G. Katz and A. de Almeida, 1992. Energy Efficient Motor Systems: A Handbook on Technology, Program and Policy Opportunities, ACEEE, Washington, D.C., USA.
[2] Bösche, A., 1993. "Variable Speed Drives in Cement Plants," *World Cement* 6 **24** pp.2-6 (1993).
[3] Bösche, A., 1993. "Variable Speed Drives in Cement Plants," *World Cement* 6 **24** pp.2-6 (1993).
[4] Fujimoto, S., 1993. Modern Technology Impact on Power Usage in Cement Plants, Proc. 35th IEEE Cement Industry Technical Conference, Toronto, Ontario, Canada, May 1993.
[5] Holderbank Consulting, 1993. Present and Future Energy Use of Energy in the Cement and Concrete Industries in Canada, CANMET, Ottawa, Ontario, Canada.
[6] Worrell, E., J.W. Bode, J.G. de Beer, 1997. Energy Efficient Technologies in Industry - Analysing Research and Technology Development Strategies - The 'Atlas' Project, Department of Science, Technology & Society, Utrecht University, Utrecht, The Netherlands.
[7] Holderbank Consulting, 1993. Present and Future Energy Use of Energy in the Cement and Concrete Industries in Canada, CANMET, Ottawa, Ontario, Canada.
[8] Worrell, E., J.W. Bode, J.G. de Beer, 1997. Energy Efficient Technologies in Industry - Analysing Research and Technology Development Strategies - The 'Atlas' Project, Department of Science, Technology & Society, Utrecht University, Utrecht, The Netherlands.
[9] Bösche, A., 1993. "Variable Speed Drives in Cement Plants," *World Cement* 6 **24** pp.2-6 (1993)
[10] Holland, M., H. M. Seebach, M., and Ranze, W., 1997. Variable Speed Drives for Roller Presses. *Proc.1997 IEEE/PCA Cement Industry Technical Conference XXXIX Conference Record*, Institute of Electrical and Electronics Engineers: New Jersey.

Block Diagram or Photo:

Variable speed drives on cement kiln and mill, images taken from http://fp.is.siemens.de/cement/en/Solutions/Drives_ID.htm

Case Studies:

- Blue Circle's Bowmanville plant (Canada) installed a variable air inlet fan, reducing electricity and fuel use in the kiln (because of reduced inlet air volume), saving C$75,000/year in energy costs (approximately $47,000 in U.S. dollars).[12]
- One case study for a modern cement plant estimated potential application for 44% of the installed motor power capacity in the plant. [13]
- One hypothetical case study estimates the savings at 70%, compared to a system with a throttle valve (or 37% compared with a regulated system) for the raw mill fan, although in practice savings of 70% are unrealistic.[14,15]
- Lafarge Canada's Woodstock plant replaced their kiln ID fans with ASDs and reduced electricity use by 6 kWh/t.[16]
- The United Nations Framework Convention on Climate Change (UNFCCC) reports on several projects utilizing variable frequency drives[17]. For clinker cooler fans at the Chittor Cement Works, Chittorgarh Company, in India, savings ranged from 0.08 to 0.17 kWh/t clinker with costs ranging from 0.012 to 0.013 $/t clinker (0.09 to 0.1 RMB/t clinker).
- For raw mill vent fans, savings ranged from 0.25 kWh/t clinker at Birla Cement Works, Chittorgarh Compan, in India to 0.41 kWh/t clinker at Chittor Cement Works Chittorgarh Company, in India. Costs for these were $0.026 and $0.023 /t clinker (0.2 and 0.18 RMB/t clinker)[17].
- For coal mill fans, Birla Cement Works in India found savings of 0.11 and 0.21 kWh/t coal at a cost of 0$.024 and 0.030/t clinker (0.18 and 0.22 RMB/t clinker)[17].

---

[11] Holderbank Consulting, 1993. Present and Future Energy Use of Energy in the Cement and Concrete Industries in Canada, CANMET, Ottawa, Ontario, Canada.

[12] CIPEC, 2001. Blue Circle Cement Fires Up Energy savings at Ontario Plants, *Heads Up CIPEC* 5 **21** pp.1-2 (2001). Published by Office of Energy Efficiency, Natural Resources Canada, Ottawa, ON, Canada.

[13] Bösche, A., 1993. "Variable Speed Drives in Cement Plants," *World Cement* 6 **24** pp.2-6 (1993).

[14] Young, G. 2002. Personal communication from Gerald I. Young, Penta Engineering Corp., St. Louis Missouri, March.

[15] Bösche, A., 1993. "Variable Speed Drives in Cement Plants," *World Cement* 6 **24** pp.2-6 (1993)

[16] Fujimoto, S., 1994. Modern Technology Impact on Power Usage in Cement Plants, IEEE Transactions on Industry Applications, Vol. 30, No. 3, June.

[17] The United Nations Framework Convention on Climate Change (2008) CDM project documents available at:

High-Efficiency Fans

Description: Fans are used throughout the cement plant in the preheater, the cooler, the alkali bypass. Replacing old inefficient fans with high efficiency fans will decrease power requirements and increase efficiency.

Energy/Environment/Cost/Other Benefits:

- See case studies below for information on energy savings and costs.
- We assume an average savings of 0.4 kWh/t and a cost of 0.07 RMB/t.

Case Studies:

- Birla Cement Works, Chittorgarh Company in India replaced the vent fan on one cement mill and found a power savings of 0.13 kWh/t clinker at a cost of 0.4 INR/t clinker (0.07 RMB/ t clinker)[1].
- Satna Cement Works, Birla Corporation Limited, in India, replaced their primary air fan with a high efficiency fan along with an inverter drive panel for speed control of the fan and found power savings of 0.11 kWh/t clinker at a cost of 0.26 INR/t clinker (0.045 RMB/t clinker)[1].
- Birla Vikas Cement Works replaced vent and primary air fans with high efficiency fans with variable voltage variable frequency (VVVF) AC drives for speed control and found savings of 0.65 kWh/t clinker at a cost of 3.1 INR/t clinker (0.53 RMB/t clinker)[1].
- Birla Vikas Cement Works also replaced three other fans with energy efficient fans and VVVF AC drives and found energy savings of 1.34 kWh/t clinker at a cost of 4.2 INR/t clinker (0.73 RMB/t clinker)[1].
- Birla Vikas Cement Works replaced the preheater fan with a more efficient fan for energy savings of 0.70 kWh/t clinker at a cost of 3 INR/t clinker (0.5 RMB/t clinker)[1].
- Birla Vikas Cement Works replaced a less efficient raw mill vent fan and circulating fan with high efficiency fans with VVVF AC drive inverters and found savings of 0.36 kWh/t clinker at a cost of 1.4 INR/t clinker (0.25 RMB/t clinker)[1].

[1] The United Nations Framework Convention on Climate Change (2008) CDM project documents available at: http://cdm.unfccc.int/Projects/DB/SGS-UKL1175367790.14/view

Maintenance of Compressed Air Systems

Description: Inadequate maintenance can lower compression efficiency and increase air leakage or pressure variability, as well as lead to increased operating temperatures, poor moisture control, and excessive contamination. Improved maintenance will reduce these problems and save energy. Proper maintenance includes the following[1]:

- *Keep the compressor and intercooling surfaces clean and foul-free.* Blocked filters increase pressure drop. By inspecting and periodically cleaning filters, the pressure drop may be kept low. Seek filters with just a 1 psig pressure drop over 10 years. Fixing improperly operating filters will also prevent contaminants from entering into tools and causing them to wear out prematurely. Generally, when pressure drop exceeds 14 to 20 kN/m^2, replace the particulate and lubricant removal elements, and inspect all systems at least annually. Also, consider adding filters in parallel that decrease air velocity, and, therefore, decrease air pressure drop.
- *Keep motors properly lubricated and cleaned*. Poor motor cooling can increase motor temperature and winding resistance, shortening motor life, in addition to increasing energy consumption. Compressor lubricant should be changed every 2 to 18 months and checked to make sure it is at the proper level.
- *Inspect drain traps* periodically to ensure they are not stuck in either the open or closed position and are clean. Some users leave automatic condensate traps partially open at all times to allow for constant draining. This practice wastes substantial energy and should never be undertaken. Instead, install simple pressure driven valves. Malfunctioning traps should be cleaned and repaired instead of left open. Some auto drains, such as float switch or electronic drains do not waste air.
- *Maintain the coolers* on the compressor to ensure that the dryer gets the lowest possible inlet temperature.[2]
- *Check belts for wear* and adjust them. A good rule of thumb is to adjust them every 400 hours of operation.
- *Replace air lubricant separators* according to specifications or sooner. Rotary screw compressors generally start with their air lubricant separators having a 14 to 20 kN/m^2 pressure drop at full load. When this increases to 70 kN/m^2, change the separator.[3]
- *Check water cooling systems* for water quality (pH and total dissolved solids), flow, and temperature. Clean and replace filters and heat exchangers per manufacturer's specifications.

---

[1] Lawrence Berkeley National Laboratory (LBNL) and Resource Dynamics Corporation, 1998. Improving Compressed Air System Performance, a Sourcebook for Industry, prepared for the U.S. Department of Energy, Motor Challenge Program, Berkeley, CA: LBNL.

[2] Ingersoll Rand, 2001. Air Solutions Group—Compressed Air Systems Energy Reduction Basics, http://www.air.ingersoll-rand.com/NEW/pedwards.htm. June 2001.

[3] Lawrence Berkeley National Laboratory (LBNL) and Resource Dynamics Corporation, 1998. Improving Compressed Air System Performance, a Sourcebook for Industry, prepared for the U.S. Department of Energy, Motor Challenge Program, Berkeley, CA: LBNL.

Energy/Environment/Cost/Other Benefits:

- The payback for filter cleaning is usually under 2 years.[4] A 2% reduction of annual energy consumption in compressed air systems is projected for more frequent filter changing.[5]
- Keeping motors properly lubricated and cleaned can help avoid corrosion.
- Inspecting and maintaining drains typically has a payback of less than 2 years.[6]
- We assume a savings of 15% on average by implementing better system-wide maintenance programs.

[4] Ingersoll Rand, 2001. Air Solutions Group—Compressed Air Systems Energy Reduction Basics, http://www.air.ingersoll-rand.com/NEW/pedwards.htm. June 2001.

[5] Radgen, P. and E. Blaustein (eds.), 2001. Compressed Air Systems in the European Union, Energy, Emissions, Savings Potential and Policy Actions, Fraunhofer Institute for Systems Technology and Innovation, Karlsruhe, Germany.

[6] Ingersoll Rand, 2001. Air Solutions Group—Compressed Air Systems Energy Reduction Basics, http://www.air.ingersoll-rand.com/NEW/pedwards.htm. June 2001.

Reduce Leaks in Compressed Air Systems

Description: Leaks can be a significant source of wasted energy. A typical plant that has not been well maintained will likely have a leak rate equal to 20 to 50% of total compressed air production capacity .[1] Leak maintenance can reduce this number to less than 10%. Estimations of leaks vary with the size of the hole in the pipes or equipment.

The most common areas for leaks are couplings, hoses, tubes, fittings, pressure regulators, open condensate traps and shut-off valves, pipe joints, disconnects, and thread sealants. A simple way to detect leaks is to apply soapy water to suspect areas. The best way to detect leaks is to use an ultrasonic acoustic detector, which can recognize the high frequency hissing sounds associated with air leaks. After identification, leaks should be tracked, repaired, and verified. Leak detection and correction programs should be ongoing efforts.

Energy/Environment/Cost/Other Benefits:

- Overall, a 20% reduction of annual energy consumption in compressed air systems is projected for fixing leaks.[2]
- In addition to increased energy consumption, leaks can make air tools less efficient and adversely affect production, shorten the life of equipment, lead to additional maintenance requirements and increase unscheduled downtime. In the worst case, leaks can add unnecessary compressor capacity. Fixing them can alleviate these problems.

[1] Ingersoll Rand, 2001. Air Solutions Group—Compressed Air Systems Energy Reduction Basics, http://www.air.ingersoll-rand.com/NEW/pedwards.htm. June 2001; Price, A. and M.H. Ross, 1989. Reducing Industrial Electricity Costs – an Automotive Case Study, The Electricity Journal. July: 40-51.

[2] Radgen, P. and E. Blaustein (eds.), 2001. Compressed Air Systems in the European Union, Energy, Emissions, Savings Potential and Policy Actions, Fraunhofer Institute for Systems Technology and Innovation, Karlsruhe, Germany.

Reducing the Inlet Air Temperature in Compressed Air Systems

Description: Reducing the inlet air temperature reduces energy used by the compressor. In many plants, it is possible to reduce inlet air temperature to the compressor by taking suction from outside the building.

Energy/Environment/Cost/Other Benefits:

- Importing fresh air can have paybacks of 2 to 5 years.[1]
- As a rule of thumb, each 3°C will save 1% compressor energy use.[2]
- In addition to energy savings, compressor capacity is increased when cold air from outside is used.
- We assume 2% savings at a cost equaling a payback period of 3 years.

Case Studies:

- Case studies in the U.S. manufacturing industrial sector have found an average payback period for importing outside air of less than 1.7 years, but costs can vary significantly depending on facility layout[3].

[1] Centre for the Analysis and Dissemination of Demonstrated Energy Technologies (CADDET), International Energy Agency, 1997b. Saving Energy with Efficient Compressed Air Systems, Maxi Brochure 06, Sittard, The Netherlands.

[2] Centre for the Analysis and Dissemination of Demonstrated Energy Technologies (CADDET), International Energy Agency, 1997b. Saving Energy with Efficient Compressed Air Systems, Maxi Brochure 06, Sittard, The Netherlands; Parekh, P., 2000. Investment Grade Compressed Air System Audit, Analysis, and Upgrade, In: Proceedings 22nd National Industrial Energy Technology Conference Proceedings. Houston, Texas. April 5-6: pp 270-279.

[3] Industrial Assessment Centers (IAC) (2005). Industrial Assessment Centers Database. Rutgers University, New Brunswick, New Jersey. http://iac.rutgers.edu/database/

Compressor Controls in Compressed Air Systems

Description: The objective of any control strategy is to shut off unneeded compressors or delay bringing on additional compressors until needed. All units that are on should be running at full-load, except for one. Positioning of the control loop is also important; reducing and controlling the system pressure downstream of the primary receiver can result in energy consumption of up to 10% or more.[1] Common control strategies for compressed air systems include:

- Start/stop (on/off) is the simplest control available and can be applied to reciprocating or rotary screw compressors. For start/stop controls, the motor driving the compressor is turned on or off in response to the discharge pressure of the machine. They are used for applications with very low duty cycles. Applications with frequent cycling will cause the motor to overheat.
- Load/unload control, or constant speed control, allows the motor to run continuously but unloads the compressor when the discharge pressure is adequate. In most cases, unloaded rotary screw compressors still consume 15 to 35% of full-load power while delivering no useful work.[2]
- Modulating or throttling controls allow the output of a compressor to be varied to meet flow requirements by closing down the inlet valve and restricting inlet air to the compressor. Throttling controls are applied to centrifugal and rotary screw compressors.
- Single master sequencing system controls, which take individual compressor capacities on-line and off-line in response to monitored system pressure demand and shut down any compressors running unnecessarily. System controls for multiple compressors typically offer a higher efficiency than individual compressor controls.
- Multi-master controls, which are the latest technology in compressed air system control, are capable of handling four or more compressors and provide both individual compressor control and system regulation by means of a network of individual controllers[3]. The controllers share information, allowing the system to respond more quickly and accurately to demand changes. One controller acts as the lead, regulating the whole operation. This strategy allows each compressor to function at a level that produces the most efficient overall operation. The result is a highly controlled system pressure that can be reduced close to the minimum level required.[4]

---

[1] Lawrence Berkeley National Laboratory (LBNL) and Resource Dynamics Corporation, 1998. Improving Compressed Air System Performance, a Sourcebook for Industry, prepared for the U.S. Department of Energy, Motor Challenge Program, Berkeley, CA: LBNL.
[2] Lawrence Berkeley National Laboratory (LBNL) and Resource Dynamics Corporation, 1998. Improving Compressed Air System Performance, a Sourcebook for Industry, prepared for the U.S. Department of Energy, Motor Challenge Program, Berkeley, CA: LBNL.
[3] Martin, N, E. Worrell, M. Ruth, L. Price, R.N. Elliott, A.M. Shipley, and J. Thorne (2000). Emerging Energy-Efficient Industrial Technologies. Lawrence Berkeley National Laboratory, Berkeley, California. LBNL-46990.
[4] United States Department of Energy (DOE) (1998). Improving Compressed Air System Performance - A Sourcebook for Industry. Office of Industrial Technologies, Washington, D.C.

Energy/Environment/Cost/Other Benefits:

- Energy savings for sophisticated controls are 12% annually.[5]
- Typical payback for start/stop controls is 1 to 2 years.
- Load/unload controls can be inefficient.
- Changing the compressor control from on/zero/off to a variable speed control can save up to 8% per year.[6]
- Advanced (multi-master) compressor controls are expected to deliver energy savings of about 3.5% where applied[7]
- In addition to energy savings, the application of controls can sometimes eliminate the need for some existing compressors, allowing extra compressors to be sold or kept for backup. Alternatively, capacity can be expanded without the purchase of additional compressors. Reduced operating pressures will also help reduce system maintenance requirements.[8]
- We assume a savings of 12% of compressed air at a cost of $0.25 US/tonne cement.

[5] Radgen, P. and E. Blaustein (eds.), 2001. Compressed Air Systems in the European Union, Energy, Emissions, Savings Potential and Policy Actions, Fraunhofer Institute for Systems Technology and Innovation, Karlsruhe, Germany.

[6] Centre for the Analysis and Dissemination of Demonstrated Energy Technologies (CADDET), International Energy Agency, 1997b. Saving Energy with Efficient Compressed Air Systems, Maxi Brochure 06, Sittard, The Netherlands

[7] Nadel, S., R.N. Elliott, M. Shephard, S. Greenberg, G. Katz and A.T. de Almeida (2002). Energy-Efficient Motor Systems: A Handbook on Technology, Program and Policy Opportunities. American Council for an Energy-Efficient Economy, Washington, D.C.

[8] United States Department of Energy (DOE) (1998). Improving Compressed Air System Performance - A Sourcebook for Industry. Office of Industrial Technologies, Washington, D.C.

Sizing Pipe Diameter Correctly in Compressed Air Systems

Description: Inadequate pipe sizing can cause pressure losses, increase leaks and increase generating costs. Pipes must be sized correctly for optimal performance or resized to fit the current compressor system.

Energy/Environment/Cost/Other Benefits:

- Increasing pipe diameter typically reduces annual energy consumption by 3% .[1] Further savings can be realized by ensuring other system components (for example, filters, fittings, and hoses) are properly sized.
- We estimate costs to be $0.5/kWh saved based on implementing this measure in other industries[2].

[1] Radgen, P. and E. Blaustein (eds.), 2001. Compressed Air Systems in the European Union, Energy, Emissions, Savings Potential and Policy Actions, Fraunhofer Institute for Systems Technology and Innovation, Karlsruhe, Germany.

[2] Galitsky, C., E. Worrell and A. Radspieler of LBNL and P. Healy and S. Zechiel of Fetzer Vineyards. 2005. BEST Winery Guidebook: Benchmarking and Energy and Water Savings Tool for the Wine Industry. Berkeley, CA: Lawrence Berkeley National Laboratory, May, LBNL 3184.

Heat Recovery for Water Preheating in Air Compressor Systems

Description: As much as 90% of the electrical energy used by an industrial air compressor is converted into heat. In many cases, a heat recovery unit can recover 50 to 90% of this available thermal energy and apply it to space heating, process heating, water heating, makeup air heating, boiler makeup water preheating, drying, cleaning processes, heat pumps, or preheating aspirated air for oil burners.[1] It's been estimated that approximately 50 MJ/hour (1.7 kgce/hour) of energy is available for each 0.05 m^3/second of capacity (at full load).[2] Heat recovery for space heating is not as common with water-cooled compressors because an extra stage of heat exchange is required and the temperature of the available heat is lower, large water cooled compressors being the exception (see below).

Energy/Environment/Cost/Other Benefits:

- Paybacks are typically less than one year[3].
- For large water cooled compressors, recovery efficiencies of 50 to 60% are typical.[4]
- Implementing this measure saves up to 20% of the energy used in compressed air systems annually for space heating.[5]
- We conservatively assume costs equal a payback period of approximately 2 years.

[1] Parekh, P., 2000. Investment Grade Compressed Air System Audit, Analysis, and Upgrade, In: Proceedings 22nd National Industrial Energy Technology Conference Proceedings. Houston, Texas. April 5-6: pp 270-279.

[2] Lawrence Berkeley National Laboratory (LBNL) and Resource Dynamics Corporation, 1998. Improving Compressed Air System Performance, a Sourcebook for Industry, prepared for the U.S. Department of Energy, Motor Challenge Program, Berkeley, CA: LBNL.

[3] Galitsky, C., S.C. Chang, E. Worrell, and E. Masanet (2005). Energy Efficiency Improvement and Cost Saving Opportunities for the Pharmaceutical Industry: An ENERGY STAR Guide for Energy and Plant Managers. Lawrence Berkeley National Laboratory, Berkeley, California. Report LBNL-57260.

[4] Lawrence Berkeley National Laboratory (LBNL) and Resource Dynamics Corporation, 1998. Improving Compressed Air System Performance, a Sourcebook for Industry, prepared for the U.S. Department of Energy, Motor Challenge Program, Berkeley, CA: LBNL.

[5] Radgen, P. and E. Blaustein (eds.), 2001. Compressed Air Systems in the European Union, Energy, Emissions, Savings Potential and Policy Actions, Fraunhofer Institute for Systems Technology and Innovation, Karlsruhe, Germany.

Lighting Control for Plant Wide Lighting

Description: Lights can be shut off during non-working hours by automatic controls, such as occupancy sensors that turn off lights when a space becomes unoccupied. Numerous case studies throughout the United States suggest that the average payback period for occupancy sensors is approximately 1 year[1]. Manual controls can also be used in addition to automatic controls to save additional energy in smaller areas.

Manual controls can be used in conjunction with automatic controls to save additional energy in smaller areas. One of the easiest measures is to install switches to allow occupants to control lights. Other lighting controls include daylight controls for indoor and outdoor lights, which adjust the intensity of electrical lighting based on the availability of daylight. An example of energy-efficient lighting control is illustrated by Figure 1, which depicts five rows of overhead lights in a workspace. During the brightest part of the day, ample daylight is provided by the window and thus only row C would need to be turned on. At times when daylight levels drop, all B rows would be turned on and row C would be turned off. Only at night or on very dark days would it be necessary to have both rows A and B turned on[2]. These methods can also be used as a control strategy on a retrofit by adapting the luminaries already present. For example, turning on the lighting in rows farthest away from the windows

Figure 1: Lighting placement and controls

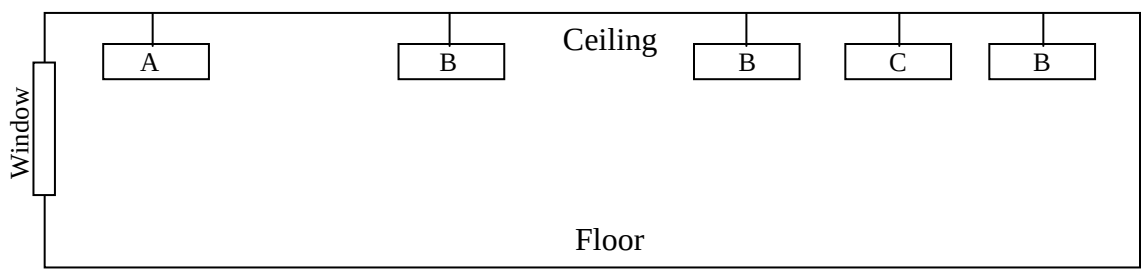

Energy/Environment/Cost/Other Benefits:

- Occupancy sensors can save up to 10% to 20% of facility lighting energy use[3].
- Payback of lighting control systems is generally less than 2 years.

[1] Industrial Assessment Centers (IAC) (2005). Industrial Assessment Centers Database. Rutgers University, New Brunswick, New Jersey. http://iac.rutgers.edu/database/

[2] Cayless, M. A. and A. M. Marsden (Eds.) (1983). Lamps and Lighting. Edward Arnold, London, England.

[3] Galitsky, C., S.C. Chang, E. Worrell, and E. Masanet (2005a). Energy Efficiency Improvement and Cost Saving Opportunities for the Pharmaceutical Industry: An ENERGY STAR Guide for Energy and Plant Managers. Lawrence Berkeley National Laboratory, Berkeley, California. Report LBNL-57260.

Replace T-12 Tubes by T-8 Tubes for Plant-wide Lighting

Description: In many industrial facilities it is common to find T-12 lighting tubes in use. T-12 lighting tubes are 12/8 inches (or 3.8 cm) in diameter (the "T" designation refers to a tube's diameter in terms of 1/8 inch increments). The initial output for these lights is high, but energy consumption is also high. They also have extremely poor efficacy, lamp life, lumen depreciation, and color rendering index. Because of this, maintenance and energy costs are high. Using T-8 lamps (lamps with a smaller diameter, of 1 inch or 2.54 cm) will increase the efficiency.

Energy/Environment/Cost/Other Benefits:

- Replacing T-12 lamps with T-8 lamps approximately doubles the efficacy of the former.
- T-8 tubes can last up to 60% longer than T-12 tubes.
- We assume a savings of 15% and costs of $0.25U.S./tonne cement.

Replace Mercury Lights by Metal Halide or High Pressure Sodium Lights for Plant Wide Lighting

Description: Replacement of mercury lamps by metal halide can increase energy efficiency while improving color rendition and increasing light levels. High pressure sodium lamps can save even more energy where color or lighting levels are less important.

Energy/Environment/Cost/Other Benefits:

- Where color rendition is critical, metal halide lamps can replace mercury or fluorescent lamps with an energy savings of 50%[1].
- Where color rendition is not critical, high pressure sodium lamps offer energy savings of 50 to 60% compared to mercury lamps.[2]
- We assume a savings of 4% of lighting electricity use at a cost of $0.1 U.S./tonne cement.

[1] Price, A. and M.H. Ross, 1989. Reducing Industrial Electricity Costs – an Automotive Case Study, The Electricity Journal. July: 40-51.

[2] Price, A. and M.H. Ross, 1989. Reducing Industrial Electricity Costs – an Automotive Case Study, The Electricity Journal. July: 40-51.

Replace Metal Halide High-intensity discharge with High-Intensity Fluorescent Lights for Plant-wide Lighting

Description: Traditional High-intensity discharge (HID) lighting can be replaced with high-intensity fluorescent lighting. These new systems incorporate high-efficiency fluorescent lamps, electronic ballasts and high-efficacy fixtures that maximize output to the work plane.

Energy/Environment/Cost/Other Benefits:

- Advantages to the new system are many; they have lower energy consumption, lower lumen depreciation over the lifetime of the lamp, better dimming options, faster start-up and restrike capability, better color rendition, higher pupil lumens ratings and less glare.[1]
- High-intensity fluorescent systems yield 50% electricity savings over standard metal halide HID.
- Dimming controls that are impractical in the metal halide HIDs can be applied and also save significant energy.
- Retrofitted systems cost about $185 per fixture, including installation costs.[2]
- In addition to energy savings and better lighting qualities, high-intensity fluorescents can help improve productivity and have reduced maintenance costs.
- We assume a savings of 20% at a cost of $0.16 U.S. /tonne cement.

[1] Martin, G., T. Lange, and N. Frewin. 2000. Next Generation Controllers for Kiln/Cooler and Mill Applications based on Model predictive Control and Neural Networks, Proceedings IEEE-IAS/PCA 2000 Cement Industry Technical Conference, Salt Lake City, UT, May 7th – 12th.

[2] Martin, G., T. Lange, and N. Frewin. 2000. Next Generation Controllers for Kiln/Cooler and Mill Applications based on Model predictive Control and Neural Networks, Proceedings IEEE-IAS/PCA 2000 Cement Industry Technical Conference, Salt Lake City, UT, May 7th – 12th.

Replace Magnetic Ballasts with Electronic Ballasts for Plant-wide Lighting

Description: A ballast is a mechanism that regulates the amount of electricity required to start a lighting fixture and maintain a steady output of light. Older magnetic ballasts can be replaced with newer electronic ballasts to save energy.

Energy/Environment/Cost/Other Benefits:

- Electronic ballasts save 12-25 percent more power than their magnetic predecessors do.[1]
- New electronic ballasts have smooth and silent dimming capabilities, in addition to longer lives (up to 50% longer), faster run-up times, and cooler operation than magnetic ballasts.[2,3]
- New electronic ballasts also have automatic switch-off capabilities for faulty or end-of-life lamps
- We assume a savings of 8% and a cost of $0.12 U.S./tonne cement.

[1] United States Environmental Protection Agency (U.S. EPA), 2001. "Green Lights Program (Part of the ENERGY STAR Program)," http://es.epa.gov/partners/green/green.html.
[2] Eley, C., T. M. Tolen, J. R. Benya, F. Rubinstein and R. Verderber (1993). Advanced Lighting Guidelines: 1993. California Energy Commission, Sacramento, California.
[3] Cook, B. (1998). High-efficiency Lighting in Industry and Commercial Buildings. Power Engineering Journal. October: 197-206.

Changing Product and Feedstock: Blended Cements

Description: The production of blended cements involves the intergrinding of clinker with one or more additives (fly ash, pozzolans, blast furnace slag, volcanic ash) in various proportions. Blended cements demonstrate a higher long-term strength, as well as improved resistance to acids and sulfates, while using waste materials for high-value applications. Short-term strength (measured after less than 7 days) of blended cement may be lower, although cement containing less than 30% additives will generally have setting times comparable to concrete based on Portland cement.

Blended cement has been used for many decades around the world. Blended cements are very common in Europe; blast furnace and pozzolanic cements account for about 12% of total cement production with Portland composite cement accounting for an additional 44%.[1] Blended cements were introduced in the U.S. to reduce production costs for cement (especially energy costs), to expand capacity without extensive capital costs, to reduce emissions from the kiln. However, in the U.S., the consumption and production of blended cement is still limited. However, Portland ordinary cement and Portland slag cement are used widely in cement produced in China. In addition, due to technical advancement and market development allowing the production of different kinds and grades of cement, some industrial byproducts like blast furnace slag, fly ash, coal gangue, limestone, zeolite, pozzolana as well as natural minerals are widely used in cement production. The average percentage of admixtures in Chinese cement products stands at 24% to 26%. [2]

China produces 25 Mt of blast furnace slag per year and has a long history of using this type of waste. Where utilized, about 20 to 25% of clinker is replaced; the country's highest slag ratio is 50%. In addition, blast furnace slag is added into concrete as well as clinker. Fly ash is also increasingly being used in China.[3]

Energy/Environment/Cost/Other Benefits:

- Prices for different additives vary greatly. Prices change with location, output, market need, produce type and ways of handling. Fuel savings of at least 10% is estimated with a similar increase in production.[4]
- The use of blended cements is a particularly attractive efficiency option since the intergrinding of clinker with other additives not only allows for a reduction in the energy used (and carbon emissions) in clinker production, but also corresponds to a reduction in carbon dioxide emissions in calcination as well.
- For blended cement with, on average, a clinker/cement ratio of 65%, the reduction in clinker production corresponds to a specific fuel savings of 1.42 GJ/t cement (48.5 kgce/t cement). There is an increase in fuel use of 0.09 GJ/t cement (3.1 kgce/t cement) for drying of the blast furnace slags but a corresponding energy savings of 0.2 GJ/t cement (7 kgce/t cement) for reducing the need to use energy to bypass kiln exit gases to remove alkali-rich dust. Energy savings are estimated to be 9 to 23 MJ/t cement (0.3

[1] Cembureau, 1997b. Best Available Techniques for the Cement Industry, Brussels: Cembureau.
[2] Institute of Technical Information for Building Materials Industry (ITIBMIC). 2005. A Survey on the Chinese Market of Cement Admixtures for Holcim Company.
[3] Cui, Y., 2004 and 2006. Personal communication with Prof. Cui Yuansheng, VP of the Institute of Technical Information for Building Materials Industry of China (ITIBMIC).
[4] Institute of Technical Information for Building Materials Industry (ITIBMIC). 2005. A Survey on the Chinese Market of Cement Admixtures for Holcim Company.

to 7.1 kgce/t cement) per percent bypass.[5] The bypass savings are due to the fact that blended cements offer an additional advantage in that the inter-ground materials also lower alkali-silica reactivity (ASR), thereby allowing a reduction in energy consumption needed to remove the high alkali content kiln dusts. In practice, bypass savings may be minimal to avoid plugging of the preheaters, requiring a minimum amount of bypass volume. This measure therefore results in total fuel savings of 1.4 GJ/t blended cement (48 kgce/t blended cement) (0.9 GJ/t clinker or 31 kgce/t clinker for 0.65 clinker to cement ratio). However, electricity consumption is expected to increase, due to the added electricity consumption associated with grinding blast furnace slag (as other materials are more or less fine enough).

- The costs of applying additives in cement production may vary. Capital costs are limited to extra storage capacity for the additives. However, blast furnace slag may need to be dried before use in cement production. This can be done in the grinding mill, using exhaust from the kiln, or supplemental firing, either from a gas turbine used to generate power or a supplemental air heater. The operational cost savings will depend on the purchase (including transport) costs of the additives[6], the increased electricity costs for (finer) grinding, the reduced fuel costs for clinker production and electricity costs for raw material grinding and kiln drives, as well as the reduced handling and mining costs. These costs will vary by location, and would need to be assessed on the basis of individual plants. An increase in electricity consumption of 16.5 kWh/t cement (11 kWh/t clinker)[7] is estimated while an investment cost of $0.72/t cement capacity ($0.5/t clinker), which reflects the cost of new delivery and storage capacity (bin and weigh-feeder) is assumed.

Block Diagram or Photo:

Selection of blended cements (Center: blended cement, bottom right and clockwise: Portland cement, fly ash, blast furnace slag, silica fume, calcined (burnt) clay, clinker and gypsum), image taken from Concrete Technology at http://www.cement.org/tech/cct_cement_specifying.asp

Case Studies:

[5] Alsop, P.A. and J.W. Post. 1995. The Cement Plant Operations Handbook, (First edition), Tradeship Publications Ltd., Dorking, UK

[6] To avoid disclosing proprietary data, the USGS does not report separate value of shipments data for "cement-quality" fly ash or granulated blast furnace slag, making it impossible to estimate an average cost of the additives.

[7] Buzzi, S. 1997. Die Horomill® - Eine Neue Mühle für die Feinzerkleinerung, ZKG International 3 50: 127-138.

- The Lianzhuo cement Factory in Guangdong Province, China, replaced some of its high grade limestone with 33 to 34% calcium oxide (CaO), along with copper tailing high content iron sulfide from a nearby county. They found fuel savings of 2.6 to 3.4 GJ/t clinker (89 to 120 kgce/t clinker), a coal savings of over 50%. The clinker production has increased from 2 tonne/day to 14 tonne/day, its strength has improved and its quality is stable.[8]

[8] Institute of Technical Information for Building Materials Industry (ITIBMIC). 2004. Final Report on Cement Survey. Prepared for the United Nations Industrial Development Organization (UNIDO) for the Contract Entitled Cement Sub-sector Survey for the Project Energy Conservation and GHG Emissions Reduction in Chinese TVEs-Phase II. Contract no. 03/032/ML, P.O. No. 16000393, September 9.

Changing Product and Feedstock: Use of Waste-Derived Fuels

Description: Waste fuels can be substituted for traditional commercial fuels in the kiln. In North America, many of the alternative fuels are focused on the use of tires or tire-derived fuel. Since 1990 more than 30 cement plants have gained approval to use tire-derived fuels, burning around 35 million tires per year.[1] Other plants have experience injecting solid and fluid wastes, as well as ground plastic wastes. Tires accounted for almost 5% of total fuel inputs in the U.S. cement industry in 1999 and all wastes total about 17% of all fuel inputs. The trend towards increased waste use will likely increase after successful tests with different wastes in Europe and North America. New waste streams include carpet and plastic wastes, filter cake, paint residue and (dewatered) sewage sludge.[2] Cement kilns also burn hazardous wastes; since the early 1990's cement kilns burn annually almost 1 Mt of hazardous waste .[3]

A cement kiln is an efficient way to recover energy from waste. The carbon dioxide emission reduction depends on the carbon content of the waste-derived fuel, as well as the alternative use of the waste and efficiency of use (for example incineration with or without heat recovery). The high temperatures and long residence times in the kiln destroy virtually all organic compounds, while efficient dust filters may reduce some other potential emissions to safe levels.[4]

Currently, in China only three cement plants are burning waste fuels. Beijing Cement Plant has the capacity to dispose of 10 kt per year of 25 types of waste; the plant is burning solid waste from the chemical industry, some paints, solvents and waste sludge from water treatment.[5] Shanghai Jinshan Cement Plant disposes of sludge dredged from the Huangpu River which runs through Shanghai.[6] Hong Kong Cement Plant purchases waste from other provinces to utilize in its kilns.[7] Other plants are utilizing wastes but the amounts are very small. [8]

Energy/Environment/Cost/Other Benefits:

- The revenues from waste intake have helped to reduce the production costs of all waste-burning cement kilns, and especially of wet process kilns.

---

[1] Cement Kiln Recycling Coalition (CKRC). 2002. Volume of Hazardous Wastes Used as Fuel in Cement Kilns Washington, D.C. Available at: http://www.ckrc.org/infocen.html.

[2] Hendriks, C.A., E. Worrell, L. Price, N. Martin and L. Ozawa Meida. 1999. The Reduction of Greenhouse Gas Emissions from the Cement Industry, IEA Greenhouse Gas R&D Programme, Cheltenham, United Kingdom (Report PH3/7), May.

[3] Cement Kiln Recycling Coalition (CKRC). 2002. Volume of Hazardous Wastes Used as Fuel in Cement Kilns Washington, D.C. Available at: http://www.ckrc.org/infocen.html.

[4] Hendriks, C.A., E. Worrell, L. Price, N. Martin and L. Ozawa Meida. 1999. The Reduction of Greenhouse Gas Emissions from the Cement Industry, IEA Greenhouse Gas R&D Programme, Cheltenham, United Kingdom (Report PH3/7), May; Cembureau, 1997b. Best Available Techniques for the Cement Industry, Brussels: Cembureau.

[5] Cui, Y., 2004 and 2006. Personal communication with Prof. Cui Yuansheng, VP of the Institute of Technical Information for Building Materials Industry of China (ITIBMIC); Wang, Xuemin, 2006a. Personal communication with Prof. Wang Xuemin of the Institute of Technical Information for Building Materials Industry of China (ITIBMIC). February.

[6] Cui, Y., 2004 and 2006. Personal communication with Prof. Cui Yuansheng, VP of the Institute of Technical Information for Building Materials Industry of China (ITIBMIC).

[7] Wang, Xuemin, 2006. Personal communication with Prof. Wang Xuemin of the Institute of Technical Information for Building Materials Industry of China (ITIBMIC). February.

[8] Wang, Xuemin, 2006. Personal communication with Prof. Wang Xuemin of the Institute of Technical Information for Building Materials Industry of China (ITIBMIC). February.

- Waste-derived fuels may replace the use of commercial fuels, and may result in net energy savings and reduced CO_2 emissions, depending on the alternative use of the wastes (for example. incineration with or without energy recovery).
- A net reduction in operating costs by injecting solid and fluid wastes, as well as ground plastic wastes is assumed. [9, 10, 11]
- Investment costs are estimated to be $1.1/annual tonne clinker for a storage facility for the waste-derived fuels and retrofit of the burner (if needed).

Block Diagram or Photo:

(a)

(b)

(a) Cement kiln using used tires in the kiln, image taken from Wikipedia at http://en.wikipedia.org/wiki/Portland_cement. (b) Chipped tires as a substitute fuel at the Cemex Rugby cement works in Warwickshire, U.K., image taken from http://www.letsrecycle.com/do/ecco.py/view_item?listid=37&listcatid=317&listitemid=9464

Case Studies:

- The St. Lawrence Cement Factory in Joliette, Quebec, Canada completed a project in 1994 where they installed an automated tire feed system to feed whole tires into the mid-section of the kiln, which replaced about 20% of the energy.[12] This translates to energy savings of 0.6 GJ/t clinker (20 kgce/t clinker). Costs for the installation of the Joliette system ran about $3.70/annual tonne clinker capacity. Costs for less complex systems where the tires are fed as input fuel are $0.11 to $1.1/annual tonne clinker.

---

[9] Centre for the Analysis and Dissemination of Demonstrated Energy Technologies (CADDET), International Energy Agency. 1996. Tyres used as fuel in cement factory, Sittard, the Netherlands: CADDET.

[10] Gomes, A. S. 1990. Energy Saving and Environmental Impact in the Cement Industry, Energy Efficiency in the Cement Industry (Ed. J. Sirchis), London, England: Elsevier Applied Science: 23-26.

[11] Venkateswaran, S.R. and H.E. Lowitt. 1988. The U.S. Cement Industry, An Energy Perspective, U.S. Department of Energy, Washington D.C., USA.

[12] Centre for the Analysis and Dissemination of Demonstrated Energy Technologies (CADDET), International Energy Agency. 1996. Tyres used as fuel in cement factory, Sittard, the Netherlands: CADDET.

Changing Product and Feedstock: Limestone Portland Cement

Description: Similar to blended cement, ground limestone is interground with clinker to produce cement, reducing the needs for clinker-making and calcination.

Energy/Environment/Cost/Other Benefits:

- This measure reduces energy use in the kiln and clinker grinding as well as CO_2 emissions from calcination and energy use.
- The addition of up to 5% limestone has shown to have no negative impacts on the performance of Portland cement, while optimized limestone cement would improve the workability slightly.[1]
- Adding 5% limestone would reduce fuel consumption by 5% (or on average 0.35 GJ/t clinker or 12 kgce/t clinker), power consumption for grinding by 3.3 kWh/t cement, and CO_2 emissions by almost 5%.
- Additional costs would be minimal, limited to material storage and distribution, while reducing kiln operation costs by 5%.

[1] Detwiler, R.J. and P.D. Tennis. 1996. The Use of Limestone in Portland Cement: a State-of-the-Art Review, Skokie, IL: Portland Cement Association.

Changing Product and Feedstock: Low-Alkali Cement

Description: In North America, the cement industry produces cements with a low alkali content (probably around 20 to 50% of the market), a much higher share than found in many other countries.[1] In some areas in the U.S. as well as China, aggregate quality may be such that low-alkali cements are required by the cement company's customers or by the climate in a particular region (for example, alkali cements are more suitable the south of China in areas of higher rainfall than in drought areas in the North). Reducing the alkali content is achieved by venting (called the by-pass) hot gases and particulates from the plant, loaded with alkali metals. The by-pass also avoids plugging in the preheaters. This becomes cement kiln dust (CKD). Disposal of CKD is regulated under the Resource Conservation and Recovery Act (RCRA). Many customers demand a lower alkali content, as it allows greater freedom in the choice of aggregates. The use of fly-ash or blast-furnace slags as aggregates (or in the production of blended cement, see below) may reduce the need for low-alkali cement. Low alkali cement is produced using domestic technology in China.[2]

Energy/Environment/Cost/Other Benefits:

- Low alkali cement production leads to lower energy consumption. Savings of 8 to 21 MJ/t (0.3 to 0.72 kgce/t) per percent bypass are assumed.[3] The lower figure is for precalciner kilns, while the higher figure is for preheater kilns.
- Typically, the bypass takes 10 to 70% of the kiln exhaust gases.[4]
- Additionally, electricity is saved due to the increased cement production, as the CKD would otherwise end up as clinker and not cement, requiring further processing.
- For illustrative purposes, assume a 20% point reduction in bypass volume, resulting in energy savings of 0.19 to 0.5 GJ/t clinker (6.5 to 17 kgce/t clinker).
- There are no investments involved in this product change, although cement users (for example ready-mix producers) may need to change the type of aggregates used (which may result in costs). Hence, this measure is most successfully implemented in coordination with ready-mix producers and other large cement users.

[1] Holderbank Consulting, 1993. Present and Future Energy Use of Energy in the Cement and Concrete Industries in Canada, CANMET, Ottawa, Ontario, Canada.
[2] Cui, Y., 2004 and 2006. Personal communication with Prof. Cui Yuansheng, VP of the Institute of Technical Information for Building Materials Industry of China (ITIBMIC).
[3] Alsop, P.A. and J.W. Post. 1995. The Cement Plant Operations Handbook, (First edition), Tradeship Publications Ltd., Dorking, UK
[4] Alsop, P.A. and J.W. Post. 1995. The Cement Plant Operations Handbook, (First edition), Tradeship Publications Ltd., Dorking, UK

Changing Product and Feedstock: Use of Steel Slag in Kiln

Description: Texas Industries (Midlothian, Texas, U.S.) in 1994 developed a system to use electric arc furnace (EAF) slags of the steel industry as input in the kiln, reducing the use of limestone. The slag that contains tricalcium silicate (C_3S) can more easily be converted to free lime than limestone. The slags replace limestone (approximately 1.6 times the weight in limestone). EAFs produce between 0.055 and 0.21 tonnes of slag per tonne of steel (on average 0.12 tonnes/tonne).[1]

China does not produce this technology domestically, and to date the measure has not been implemented in cement kilns in China,[2] however, the measure is mature internationally.

Energy/Environment/Cost/Other Benefits:

- The CemStar® process allows replacing 10 to 15% of the clinker by EAF-slags, reducing energy needs for calcination. The advantage of the CemStar® process is the lack of grinding the slags, but adding them to the kiln in 5 cm lumps. Depending on the location of injection it may also save heating energy.
- Calcination energy is estimated to be 1.9 GJ/t clinker (65 kgce/t clinker). [3]
- Because the lime in the slag is already calcined, it also reduces CO_2 emissions from calcination, while the reduced combustion energy and lower flame temperatures lead to reduced NOx emissions.[4]
- For illustrative purposes alone, using a 10% injection of slags would reduce energy consumption by 0.19 GJ/t clinker (6.5 kgce/t clinker), while reducing CO_2 emissions by roughly 11%.
- Energy savings can be higher in wet kilns due to the reduced evaporation needs. Reductions in NOx emissions vary by kiln type and may be between 9 and 60%, based on measurements at two kilns.[5]
- Equipment costs are mainly for material handling and vary between $200,000 and $500,000 per installation.
- Total investments are approximately double the equipment costs.
- Texas Industries charges a royalty fee for use of CemStar®.[6]
- Costs savings consist of increased income from additional clinker produced without increased operation and energy costs, as well as reduced iron ore purchases (as the slag provides part of the iron needs in the clinker). The iron content needs to be balanced with other iron sources such as tires and iron ore.
- In the U.S., the U.S. Environmental Protection Agency awarded the CemStar® process special recognition in 1999 as part of the ClimateWise program.

---

[1] United States Department of Energy, Office of Industrial Technologies (U.S.DOE OIT). 1996. Energy and Environmental Profile of the U.S. Iron and Steel Industry, Washington, DC: U.S.DOE OIT.

[2] Cui, Y., 2004 and 2006. Personal communication with Prof. Cui Yuansheng, VP of the Institute of Technical Information for Building Materials Industry of China (ITIBMIC).

[3] Worrell, E., L. Price, N. Martin, C. Hendriks and L. Ozawa Meida. 2001. Carbon Dioxide Emissions from the Global Cement Industry, Annual Review of Energy and the Environment 26: 303-329.

[4] Battye, R., S. Walsh, J. Lee-Greco. 2000. NOx Control Technologies for the Cement Industry, Prepared for U.S. Environmental Protection Agency, Triangle Park, NC.

[5] Battye, R., S. Walsh, J. Lee-Greco. 2000. NOx Control Technologies for the Cement Industry, Prepared for U.S. Environmental Protection Agency, Triangle Park, NC.

[6] Battye, R., S. Walsh, J. Lee-Greco. 2000. NOx Control Technologies for the Cement Industry, Prepared for U.S. Environmental Protection Agency, Triangle Park, NC.